3GPP TR 23.794 V2.0.0 (2019-12)

Technical Report

3rd Generation Partnership Project; Technical Specification Group Services and System Aspects; Study on Enhanced IMS to 5GC Integration (Release 16)

Keywords

3GPP, 5G, Architecture, Integration, IMS, Study

3GPP

Postal address

3GPP support office address

650 Route des Lucioles - Sophia Antipolis
Valbonne - FRANCE
Tel.: +33 4 92 94 42 00 Fax: +33 4 93 65 47 16

Internet

http://www.3gpp.org

Contents

Foreword

This Technical Report has been produced by the 3rd Generation Partnership Project (3GPP).

The contents of the present document are subject to continuing work within the TSG and may change following formal TSG approval. Should the TSG modify the contents of the present document, it will be re-released by the TSG with an identifying change of release date and an increase in version number as follows:

Version x.y.z

where:

x the first digit:

1 presented to TSG for information;

2 presented to TSG for approval;

3 or greater indicates TSG approved document under change control.

y the second digit is incremented for all changes of substance, i.e. technical enhancements, corrections, updates, etc.

z the third digit is incremented when editorial only changes have been incorporated in the document.

1 Scope

The aim of this Technical Report is to study and specify potential enhancements to the IMS architecture to enable IMS FE to integrate with the 5GC network functions to enable IMS applications to directly leverage the features and capabilities of 5GC.

The specific capabilities of 5GC included in this study:

- In regard to 5GC network slicing; what enhancements (if any) are necessary for IMS to efficiently support devices and networks with multiple slices and different IMS services per slice?
- Should (and How does) IMS leverage the 5GC's support for localized routing of traffic and placement of IMS elements? How do such optimizations impact IMS media bearers, IMS signalling bearers, and IMS functions? How is service continuity provided in presence of localized routing?
- Whether and how can IMS applications and network functions utilize the service based capabilities and service based interfaces of the 5GC (for interactions between the IMS and the 5GC)? Which 5GC functions should be interfaced with IMS using service based interfaces?

2 References

The following documents contain provisions which, through reference in this text, constitute provisions of the present document.

- References are either specific (identified by date of publication, edition number, version number, etc.) or non-specific.
- For a specific reference, subsequent revisions do not apply.
- For a non-specific reference, the latest version applies. In the case of a reference to a 3GPP document (including a GSM document), a non-specific reference implicitly refers to the latest version of that document *in the same Release as the present document*.

[1] 3GPP TR 21.905: "Vocabulary for 3GPP Specifications".

[2] 3GPP TS 23.228: "IP Multimedia Subsystem (IMS); Stage 2".

[3] 3GPP TS 23.501: "System Architecture for the 5G System".

[4] 3GPP TS 23.502: "Procedures for the 5G System".

[5] 3GPP TS 23.503: "Policy and Charging Control Framework for the 5G System; Stage 2".

[6] 3GPP TS 23.237: "IP Multimedia Subsystem (IMS) Service Continuity; Stage 2".

[7] 3GPP TS 23.203: "Policy and charging control architecture".

[8] IETF RFC 6665: "SIP-Specific Event Notification".

[9] 3GPP TS 29.329: "Sh Interface based on Diameter - Protocol details".

[10] 3GPP TS 29.228: "IP Multimedia (IM) Subsystem Cx and Dx interfaces; Signalling flows and message contents".

[11] 3GPP TS 29.229: "Cx and Dx interfaces based on the Diameter protocol; Protocol details".

[12] 3GPP TS 23.167: "IP Multimedia Subsystem (IMS) emergency sessions".

[14] 3GPP TS 29.328: "IP Multimedia (IM) Subsystem Sh interface; Signalling flows and message contents".

3 Definitions and abbreviations

3.1 Definitions

For the purposes of the present document, the terms and definitions given in TR 21.905 [1], and the following apply. A term defined in the present document takes precedence over the definition of the same term, if any, in TR 21.905 [1].

<defined term>: *<definition>.*

3.2 Abbreviations

For the purposes of the present document, the abbreviations given in TR 21.905 [1], TS 23.228 [2], TS 23.501 [3] and the following apply. An abbreviation defined in the present document takes precedence over the definition of the same abbreviation, if any, in TR 21.905 [1].

5GC	5G Core
5GS	5G System
AGW	Access Gateway
BP	Branching Point
CSRN	Circuit Switched Routing Number
FE	Functional Entity
GRUU	Globally Routable User Agent URI
I-CSCF	Interrogating CSCF
IMS AS	IMS Application Server IMS FE IMS Functional Entity
IPX	IP Exchange
LBO	Local Breakout
MMTEL	Multi Media Telephony
P-CSCF	Proxy CSCF
PSA	PDU Session Anchor
SA	Session Anchor
S-CSCF	Serving CSCF
SCC AS	Service Continuity Control Application Server TADS Terminating Access Domain Selection
UL-CL	Uplink Classifier
ULC	Uplink Classifier

Editor's note: 5G related abbreviations are pending update to TR 21.905 [1]

Editor's note: It is FFS which abbreviation for UL-CL/ULC and SA/PSA is preferred.

4 Architecture Assumptions

The following architectural assumptions are applicable for all potential solutions:

- IMS architecture defined is TS 23.228 [2] (release 15) is the baseline, especially with regard to usage of SIP signalling.
- The IMS Service Based Cx, Dx, Sh are produced logically by the HSS, so the functional allocation of the IMS service logic to HSS is in line with TS 23.228 [2].
- All existing IMS architectural models (e.g. TS 23.228 [2], TS 23.237 [6], etc.) shall be supported
- SIP signalling is used between UE and IMS Network

5 Key Issues

5.1 Key Issue 1: Routing of IMS traffic via a localized UPF

The 5GC enables traffic to route via localized UPF close to the edge of the network (in some cases adjacent to the RAN nodes). Some IMS services may be able to benefit from the lower latency and/or lower backhaul requirements that such deployments can enable, however current IMS applications and services are not able to leverage these capabilities. This key issue investigates the interactions required to leverage localized routing of IMS media and signalling traffic, the changes to enable effective control and management of such routing, and impacts of mobility and roaming.

Example Use Case A:

Routing of IMS traffic (e.g. video) between two (or more) users using an efficient UP path.

Example Use Case B:

A "best effort video service" where the IMS video traffic from UE is offloaded at a UPF closer to the UE to minimize the backhaul resource usage based on a decision by the IMS.

The following is a partial list of the issues to be addressed:

- How can the IMS network influence or control how the 5GC selects the UP path?
- Which IMS node interacts with the 5GC (i.e. IMS AS, CSCF, or other IMS node)?
- How does an application server request traffic to route using a local UPF?
- How does IMS request traffic to route using (or prevent routing using) a local UPF?
- How is the mobility of the UE considered, and how is service continuity ensured?
- If the UE is roaming, how can the localized routing be extended into the VPLMN (if supported)?
- What are the impacts on billing and charging?

5.2 Key Issue 2: Placement of IMS application server in localized environments

The 5GC in release 15 defined some functionality to enable "mobile edge computing" (i.e. computing resources located close to the edge of the network) to enable enhanced services to users. The functionality defined in release 15 focused on general compute applications, and did not analyse the special case of IMS applications. This key issue investigates the enhancements to current capabilities of IMS and 5GC to enable the operation of IMS servers in the mobile edge space.

Example Use Case A:

For a given venue (e.g. stadium) IMS videos may be stored and retrieved locally for playback only on UE's that are located on a group of small cells that serve the venue.

Example Use Case B:

Mission critical services that require optimization of signalling traffic as well as media may require, placement of P-CSCF and AGW (or other IMS FE) close to AN.

The following is a partial list of the issues to be addressed:

- How can IMS leverage 5G support for edge computing?
- What additions to IMS and 5G support for edge computing capabilities are required?
- What restrictions are there (if any) on IMS applications in the edge network?
- How are the localized IMS applications identified?

- How are IMS applications outside the local PLMN impacted (e.g. roaming).
- What impacts does the solution have on mobility?
- What impacts does the solution have on service, and application continuity?
- Is there any further impact on routing of IMS media and IMS signalling?

5.3 Key Issue 3: Network Slicing and IMS

In release 15, 5GC developed capabilities to divide the network into slices to better offer services to users and devices - in many cases the details of network slicing do not impact IMS, however if the IMS domain offers different services to different 5GC network slices there may be some impacts. This key issue investigates the impacts to the IMS domain due to 5GC network slicing, and how a IMS network can ensure a user or device with multiple 5GC network slices and multiple IMS services from utilizing the appropriate 5GC network slice for each IMS service and prevent inappropriate services been used from the incorrect 5GC network slice.

Examples of the use cases that solutions to this key issue will enable include:

Use Case A: Different 5GC slices optimized for different IMS services

In this use case each 5GC slice supports a different IMS service and the 5GC slice is optimized for the media type associated with the IMS service. It is possible that either a shared or separate IMS network provides the services for each slice (scenario 1 or scenario 2 described below).

Figure 5.3.1 shows an example implementation of this use case where 3 5GC slices are used, one for IMS messaging service, one for IMS voice service, and one for IMS video call service. The diagram shows the association of the IMS services to their appropriate slice, the IMS services may be supported by a shared IMS network (i.e. Scenario 2), in which case the 5GC slices will connect to through the common IMS network.

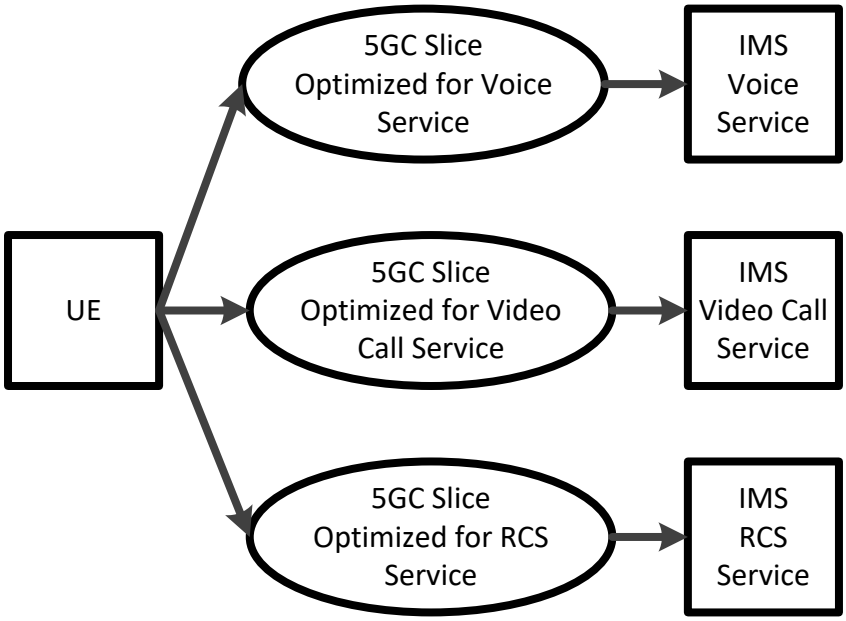

Figure 5.3.1: Example use case with different 5GC slices optimized for different IMS services

Use Case B: Different 3rd party 5GC slices with support for 3rd party IMS services

In this use case separate 5GC slices are operated by different parties (some separate from the network operator); each 5GC slice is used to support IMS services according to the 5GC slice operator's service needs; these IMS services may be different or duplicated per slice according to service requirements. Additionally, some 5GC slices may provide non-IMS services. While it is feasible that a shared IMS network provides the services for each slice (as per scenario 1 described below), this is an unlikely implementation and it is assumed each party has their own IMS network (as per scenario 2 described below).

Figure 5.3.2 shows an example implementation of this use case where 3 5GC slices are provided, one provided by an automobile manufacturer, one provided by an automotive entertainment service provider, and one provided by a network operator. A different mix of IMS and connectivity services are provided by each 5GC slice. The diagram shows the association of the IMS services to their appropriate slice, however as each slice is provided by different parties it is unlikely that the IMS services share an IMS network (i.e. Scenario 2); thus each 5GC slice would be associated with a different IMS network supporting the IMS services associated with the 5GC slice.

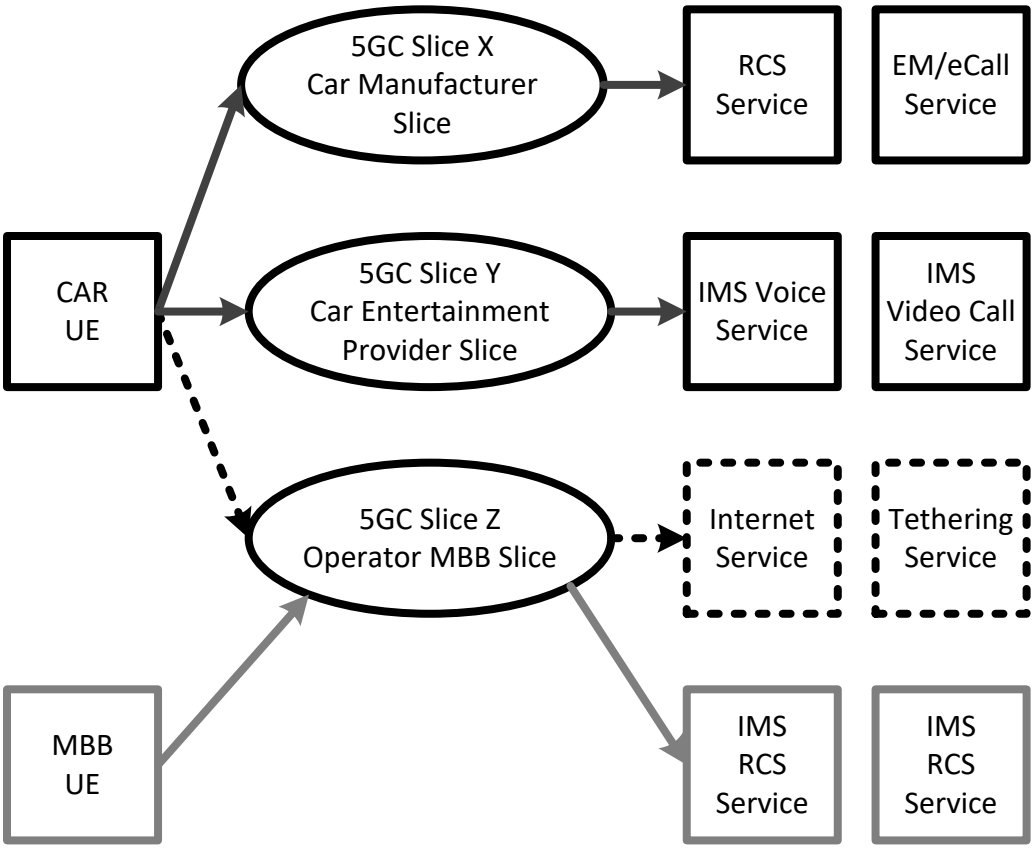

Figure 5.3.2: Example use case with different 3rd party 5GC slices providing IMS services

Two scenarios are possible (and may be mixed when more than 2 slices are considered):

Scenario 1 - Each 5GC network slice is associated with a separate and distinct IMS network

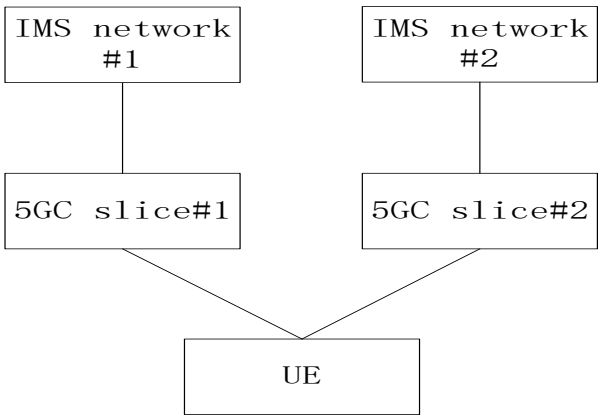

Figure 5.3-3 UE connects to two IMS networks through two 5GC network slices

Scenario 2 - Each 5GC slice is associated with a common IMS network

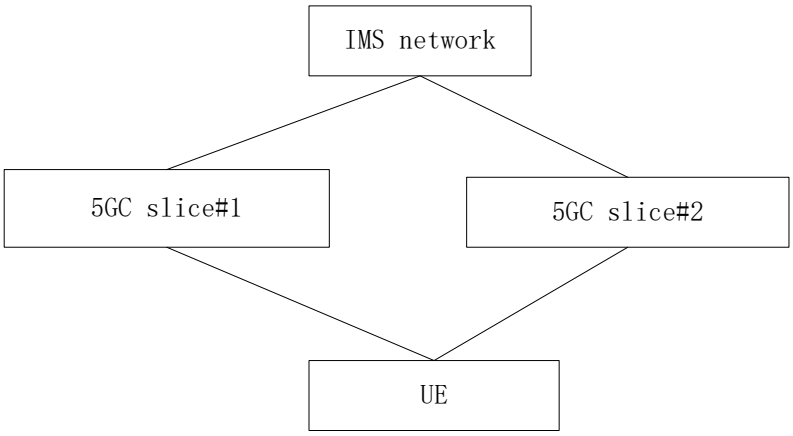

Figure 5.3-4: UE connects to common IMS network through two 5GC network slices

Solutions may relate to one, or both, of these scenarios.

The following is a partial list of what aspects the solutions to this key issue need to address:

- How the IMS service ensures a specific 5GC slice is used.
- What an IMS service does if a required 5GC slice is not available or prohibited.
- When the IMS FEs and UE are in different PLMNs (i.e. roaming), how the two networks interact.
- How IMS FEs identify the currently used 5GC slice for a specific IMS service.
- Whether the IMS applications are aware of the 5GC slice information.
- What additional information is carried in the IMS signalling between IMS-FE's and UE
- Any changes to the P-CSCF discovery procedures due to 5GC slicing.
- How the UE and network register and authenticate the IMS service in specific slice (whether the IMS is shared or separated).
- For MT services, how does the IMS network determine to deliver the service to the appropriate 5GC network slice.
- Whether there are any impacts to the 'UE's IMS identities and what they are if any.
- IMS backward compatibility to Rel-15.
- Solutions should specify if they are applicable to scenario 1 only, scenario 2 only, or both scenarios 1&2. Solutions that apply to both scenarios 1&2 should identify any aspects that apply differently between the to two scenarios.

5.4 Key Issue 4: Discovery of Network Functions

This key issue explores options for :

- discovery of network functions exposed to IMS e.g.:
  - discovery of PCF services by P-CSCF,
  - discovery of HSS by IMS network entities (e.g. I-CSCF, S-CSCF, IMS AS) in deployments using both Diameter and service-based interfaces.
- as well as discovery of IMS functions e.g. P-CSCF by SMF.

5.5 Key Issue 5: Enabling SBA-based Cx

This key issue explores mapping of existing Cx procedures to currently defined Nudm services and operations and introducing an SBA-based interface to HSS. In particular, the following aspects, among others, will be studied: -

- The benefits of introducing SBA to this interface;
- Adding an SBA-based interface to HSS;
- How an SBA-based Cx interface for HSS and UDM can inherit from currently defined Nudm services and operations including:
  - whether an SBA-based Cx interface should be re-used with potential extra services/operations/parameters.
  - or whether dedicated services should be created for IMS.

The outcome should strive to get same result for SBA-based Cx and SBA-based Sh interfaces.

5.6 Key Issue 6: Enabling SBA-based Sh

This key issue explores mapping of existing Sh procedures to currently defined Nudm services and operations and introducing an SBA-based interface to HSS. In particular, the following aspects, among others, will be studied:

- The benefits of introducing SBA to this interface;
- Depicting some use cases.
- Adding an SBA-based interface to HSS
- How an SBA-based Sh interface for HSS and UDM can inherit from currently defined Nudm services and operations including:
  - whether an SBA-based Sh interface should be re-used with potential extra services/operations/parameters.
  - or whether dedicated services should be created for IMS.

The outcome should strive to get same result for SBA-based Sh and SBA-based Cx interfaces.

NOTE: In existing Sh operations, HSS currently acts as a proxy toward other Network Functions/network entities, e.g. TADS, NetLoc, CSRN retrieval, etc.

5.7 Key Issue 7: How can IMS utilize services provided by Npcf

As specified in TS 23.503 [5], to allow the 5G system to interwork with AFs supporting existing services, the PCF shall support the corresponding Rx procedures and requirements as defined in TS 23.203 [7]. This facilitates the migration from EPC to 5GC without requiring these AFs to upgrade to support the service based N5 interface. However, with the introduction of service based interface to PCF, the removal of the Rx point-to-point interface may be expected to ease testing, reliability, and troubleshooting issues.

This key issue addresses the following aspects:

- how IMS utilizes services provided by Npcf to support the interaction with PCF.
- what information is used by P-CSCF and how P-CSCF derives the information to determine which PCC interface is used for a specific IMS session establishment, when P-CSCF supports N5 and Rx simultaneously.
- what input and output parameters are needed in Npcf service operations to add support existing IMS procedures over 5GS.

5.8 Key Issue #8: How can IMS utilize services provided by 5GC NFs other than PCF

All of the 5GC control plane NFs are specified as service based and any NF can be consumer of the services provided by other NFs, if supported by the procedures.

This key issue addresses the following aspects:

- How IMS can utilize services provided by 5GC NFs other than PCF.
- How to determine the UE location in IMS entities with service operations (e.g. determination of the visited PLMN ID in case of Home-Routed VoLTE roaming).

5.x Key issue #X: <Key Issue Title>

5.x.1 Description

Editor's note: This clause provides a short description of the key issue.

5.x.2 Requirements

Editor's note: This clause provides the requirements the solutions to this key issue need to address.

6 Solutions

6.1 Solution 1: Entire IMS in localized network

6.1.1 Description

6.1.1.1 General

This is a solution to key issue #2.

In this solution, all functions of the IMS (except HSS) are in a local network (i.e. a network located physically close to the RAN nodes). The proximity to and the number of RAN nodes inside the local network will be determined by the specifics of the implementation and the services used.

6.1.1.2 Architecture

The following diagram shows the configuration of the IMS and 5GC functional elements, it assumes that IMS Access Gateways are used for media traffic (however other IMS topologies are possible).

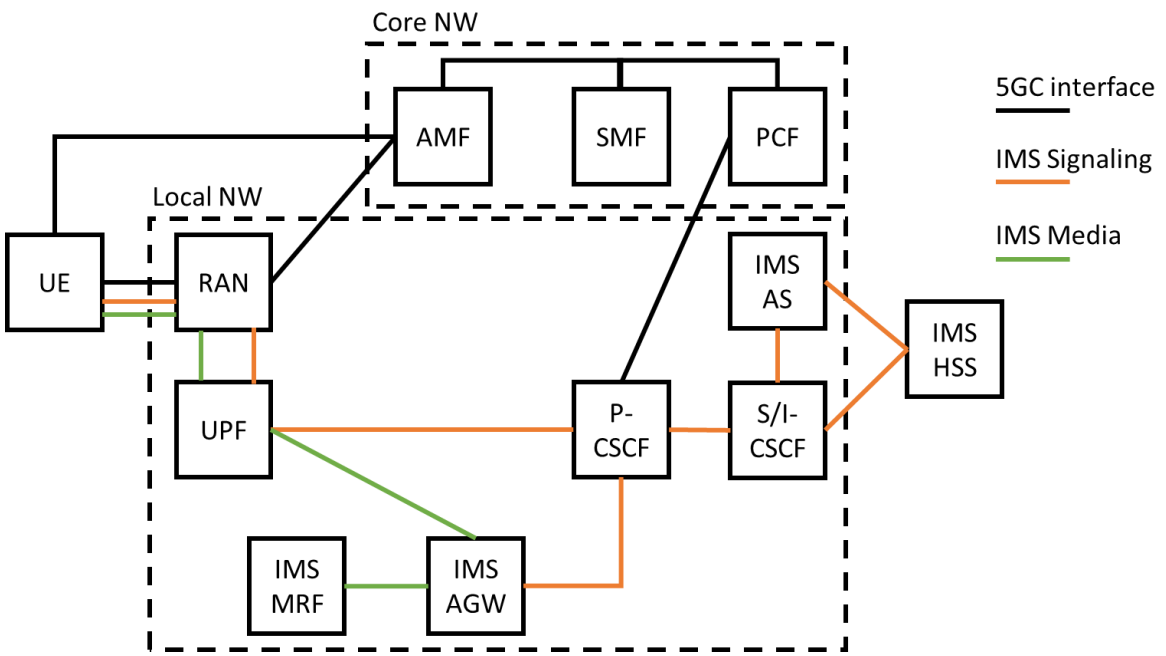

Figure 6.1.1.2: IMS located in local network near RAN nodes

The IMS HSS is located outside the local network (this may be co-located with the 5GC functions or other core network functions).

NOTE: Some interfaces and functions omitted for clarity.

Editor's note: The nature of the P-CSCF to PCF interface is FFS.

The local network is a sub-network of the operator network located physically close to the access network, typically this is a group of cells (including a single cell) with common connectivity; this may be the result of deployment constraints (e.g. fibre cluster), or service need (e.g. stadium, campus). Depending on IP routing configuration the local network may or may not enable IP connectivity to/from UE's connected to cells outside the local area (hence this is not the same as LADN).

6.1.1.3 Determination of Localized Routing

When the UE establishes the PDU Session for IMS service, the SMF shall select the UPF in the local network, the SMF can make this determination based on the DNN, subscription information (e.g. NSSAI), roaming status, or a combination of these attributes and from the location information of the access node (TA or Cell ID). Using static configuration in the SMF (based on the UPF used), the local P-CSCF is discovered, and from there registration with the local IMS proceeds according to normal IMS procedures (albeit with the FE's in the local network).

Editor's note: Whether (and how) the UE can simultaneously register to a local IMS, and a centralized IMS is FFS.

Editor's note: The selection by the SMF for a localized P-CSCF based on factors other than the selected UPF is FFS.

6.1.1.4 Mobility Aspects

So long as the UE does not move to a RAN node outside the local network area, the existing mobility functions of the 5GC are used unchanged.

When the UE moves to a RAN node outside the local network area the UE may lose IP connectivity to the P-CSCF forcing it to re-register for IMS service in the new area, this will result in termination (and possible interruption) of ongoing service sessions, re-authentication, and re-establishment of any security associations. If the UE maintains IP address preservation without RAT change after moving outside the local network area, the P-CSCF will trigger re-registration.

Editor's note: How the P-CCSF determines that the UE has moved outside the local area and subsequent procedures are FFS.

6.1.2 Impacts on existing nodes and functions

No new functionality.

If the number of local networks deployed is large the PCF will need to support many different P-CSCF registrations and interfaces to each P-CSCF than for similar centralized networks. Similarly, the HSS will need to support many more interfaces with the S-CSCF and IMS-AS, than typical for a centralized implementation.

6.1.3 Solution Evaluation

Editor's note: Evaluation of the solution is FFS.

6.2 Solution 2: IMS AS Influences routing of IMS media traffic as a 5G AF

6.2.1 Description

6.2.1.1 General

This is a solution to key issue #1

When the IMS AS determines that routing of media traffic via a localized UPF is necessary, it uses the "AF influence of traffic routing" feature of the 5GC, to direct the traffic for a specific media flow to the local UPF. If local routing is not possible the 5GC routes the media using the centralized network.

Editor's note: Whether and how, the P-CSCF switches the media to use local routing if it becomes available subsequently to the media establishment is FFS.

6.2.1.2 Architecture

The following diagram assumes that the IMS AS interacts with the PCF to influence the routing of traffic, the use of the same capability via the NEF is also possible (but not shown). It is also assumed that IMS Access Gateways are used for media traffic (however other IMS topologies are possible).

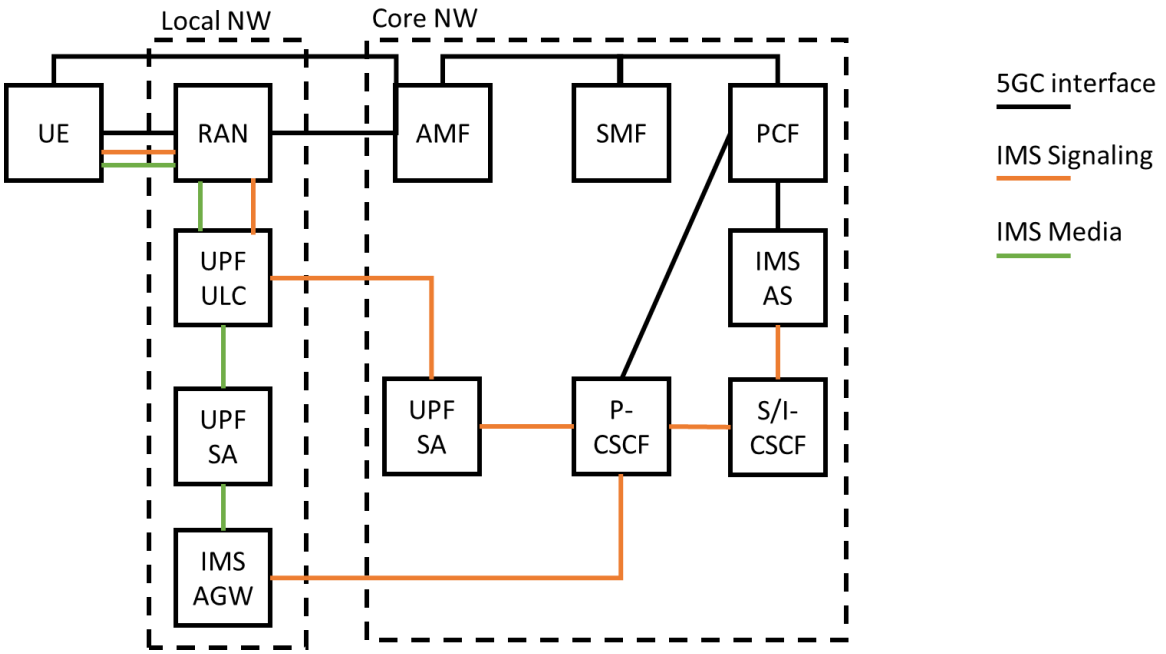

Figure 6.2.1.2: IMS and 5GC architecture for local UPF routing by IMS AS

NOTE: Some interfaces and functions omitted for clarity.

IMS AS uses Npcf to communicate with PCF to request localized routing be used for media traffic.

Editor's note: The nature of the P-CSCF to PCF interface is FFS.

The local network is a sub-network of the operator network located physically close to the access network, typically this is a group of cells (including a single cell) with common connectivity; this may be the result of deployment constraints (e.g. fibre cluster), or service need (e.g. stadium, campus). The IP routing configuration of the local network should provide IP connectivity to/from UE's connected to cells outside the local area (hence this is not the same as LADN).

6.2.1.3 Establishment Procedure

When the UE requests the PDU session for IMS signalling, based on the DNN, S-NSSAI, subscription information, roaming status, or a combination of these factors, the SMF will establish the IMS PDU session with a UPF uplink classifier in the local network, and a UPF session anchor (for IMS signalling) in the core network.

When IMS later requires a locally routed media bearer, it will use the procedure described in figure 6.2.1.3 to establish the media bearer (by modifying the PDU session used for IMS).

The following procedure assumes IMS AS is interacting with PCF (as a 5G AF).

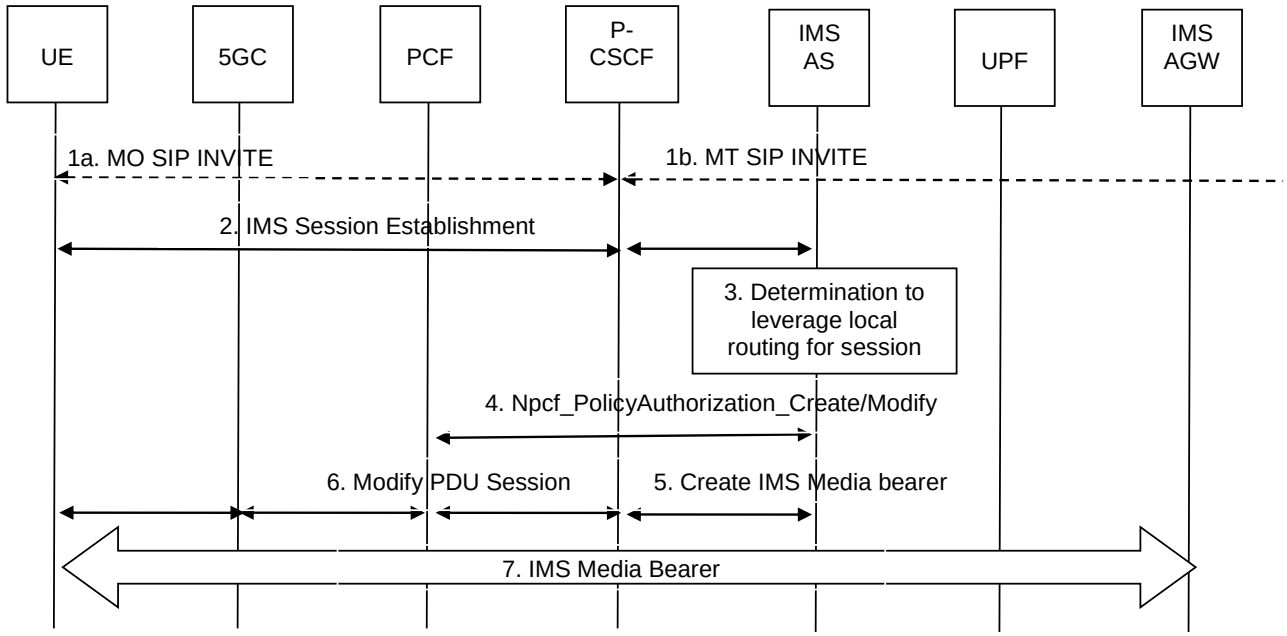

Figure 6.2.1.3 High-level IMS Media Bearer Establishment with local UPF

1: IMS Session Initiation, either:

1a: UE sends a SIP INVITE message to its P-CSCF, or

1b: The P-CSCF receives a SIP INVITE for a MT session towards a UE.

2: IMS Session establishment continues.

3: IMS AS determines that localized routing may be applicable to this session (depending on the service and use case this may be at different points in the IMS session establishment).

Editor's note: How the IMS AS determines the need for localized routing is FFS.

4: The IMS AS uses the Npcf_PolicyAuthorization_Create or Modify service specifying the UE it wishes to influence and the list of DNAI that are applicable. (the IMS AS continues the IMS Session establishment procedure).

Editor's note: How the IMS AS can obtain or determine the DNAI is FFS.

5. The IMS requests the P-CSCF top create an IMS media bearer for this session (according to the SDF agreed in the session establishment procedure). Based on configuration the P-CSCF determines the applicable AGW (and hence UPF) the media session will utilize.

Editor's note: Whether and If steps 4 and 5 can be combined into a single interaction is FFS.

6. P-CSCF requests modification of the PDU session to create the requested media bearer to the selected AGW (indicating SCC mode 2 or SCC mode 3); the SMF selects the UPF SA and inserts the UPF ULC according to existing procedures.

7. Media Bearer established.

Editor's note: IMS AS use of the NEF to influence traffic routing is FFS.

6.2.1.3 Mobility Aspects

So long as the UE does not move to a RAN node outside the local network area, the existing mobility functions of the 5GC are used unchanged.

When the UE moves to a RAN node outside the local network area, the PCF informs the IMS AS (via the event notify procedure), the IMS AS updates the DNAI for the localized routing, and triggers the P-CSCF to re-allocate the IMS

AGW; using either SSC mode 2 or 3 (depending on media and service type) the media is transitioned to the new IMS AGW and service continues.

Editor's note: Details of the IMS-AGW re-allocation procedure and how SSC modes 2 or 3 are used for mobility are FFS.

There is no support for EPC interworking, if the UE moves to a RAN node not connected to 5GC, the media session is terminated.

6.2.2 Impacts on existing nodes and functions

Editor's note: Impacts to existing nodes and functions are FFS

6.2.3 Solution Evaluation

Since in release 15, AF influence of traffic routing is only defined in the non-roaming case and LBO roaming case, this solution is only applicable to UEs located in their HPLMN (or equivalent), as the IMS AS is always located in the home network.

Editor's note: Additional evaluations are FFS

6.3 Solution 3: P-CSCF Influences routing of IMS media traffic as a 5G AF

6.3.1 Description

6.3.1.1 General

This is a solution to key issue #1

When the IMS AS determines that routing of media traffic via a localized UPF is necessary, it indicates this in the to the P-CSCF, such that the P-CSCF can then use the "AF influence of traffic routing" feature of the 5GC, to direct the traffic for a specific media flow to the local UPF. If local routing is not possible the 5GC routes the media using the centralized network.

Editor's note: Whether and how, the P-CSCF switches the media to use local routing if it becomes available subsequently to the media establishment is FFS.

6.3.1.2 Architecture

The following diagram assumes that the P-CSCF interacts with the PCF to influence the routing of traffic, the use of the same capability via the NEF is also possible (but not shown). It is also assumed that IMS Access Gateways are used for media traffic (however other IMS topologies are possible).

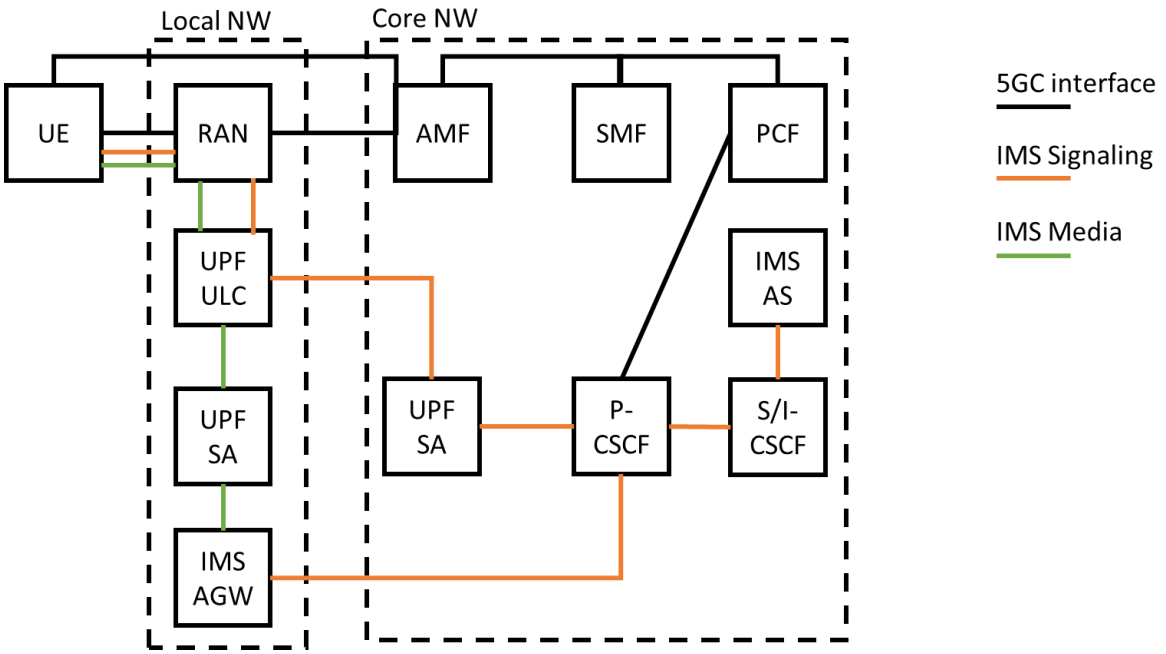

Figure 6.3.1.2: IMS and 5GC architecture for local UPF routing by P-CSCF

NOTE: Some interfaces and functions omitted for clarity.

P-CSCF uses Npcf to communicate with PCF to request localized routing be used for media traffic.

Editor's Note: Whether (and if) the P-CSCF uses Npcf for other functions is FFS.

The local network is a sub-network of the operator network located physically close to the access network, typically this is a group of cells (including a single cell) with common connectivity; this may be the result of deployment constraints (e.g. fibre cluster), or service need (e.g. stadium, campus). The IP routing configuration of the local network should provide IP connectivity to/from UE's connected to cells outside the local area (hence this is not the same as LADN).

6.3.1.3 Establishment Procedure

When the UE requests the PDU session for IMS signalling, based on the DNN, S-NSSAI, subscription information, roaming status, or a combination of these factors, the SMF will establish the IMS PDU session with a UPF uplink classifier in the local network, and a UPF session anchor (for IMS signalling) in the core network.

When IMS later requires a locally routed media bearer, it will use the procedure described in figure 6.3.1.3 to establish the media bearer (by modifying the PDU session used for IMS)

The following procedure assumes P-CSCF is interacting with PCF (as a 5G AF).

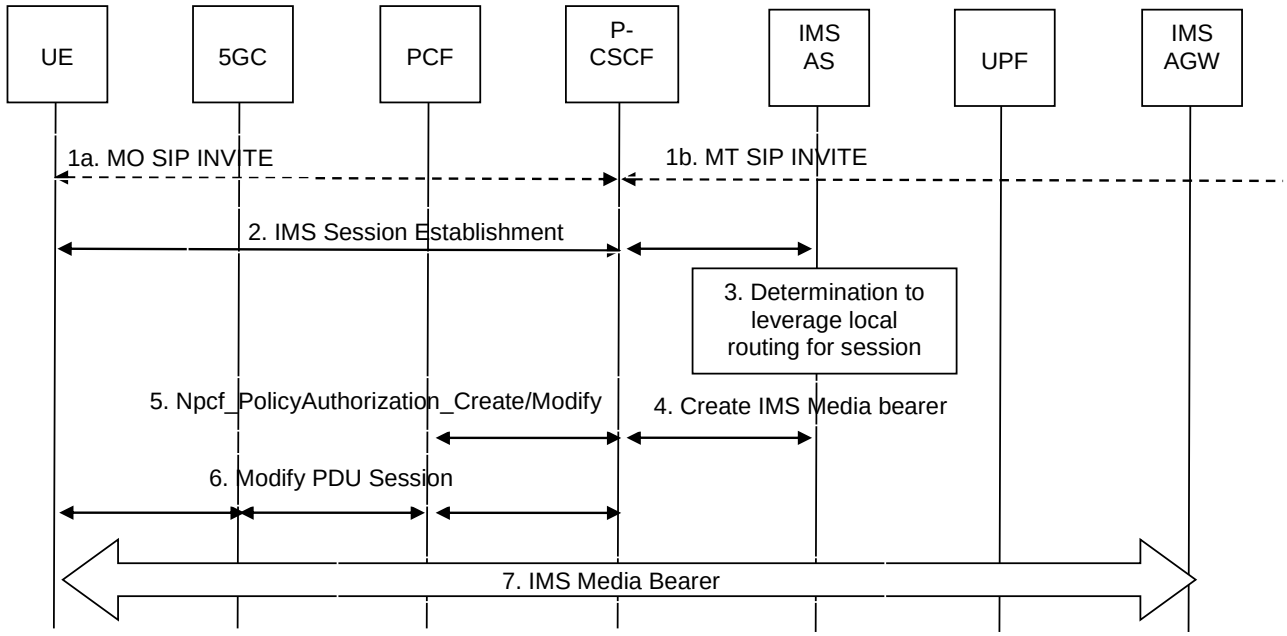

Figure 6.3.1.3: High-level IMS Media Bearer Establishment with local UPF

1: IMS Session Initiation, either:

1a: UE sends a SIP INVITE message to its P-CSCF, or

1b: The P-CSCF receives a SIP INVITE for a MT session towards a UE.

2: IMS Session establishment continues.

3: IMS AS determines that localized routing may be applicable to this session (depending on the service and use case this may be at different points in the IMS session establishment).

Editor's note: How the IMS AS determines the need for localized routing is FFS.

4: The IMS requests the P-CSCF to create an IMS media bearer for this session (according to the SDF agreed in the session establishment procedure) - included in this message is an indication that localized media bearers are preferred.

5: The P-CSCF uses the Npcf_PolicyAuthorization_Create or Modify service specifying the UE's routing it wishes to influence and the list of DNAI that are applicable. (the P-CSCF continues the IMS Session establishment procedure).

Editor's note: How the P-CSCF determines or obtains the DNAI is FFS.

6. Based on configuration the P-CSCF determines the applicable AGW (and hence UPF) the media session will utilize and requests modification of the PDU session to create the requested media bearer to the selected AGW (indicating SCC mode 2 or SCC mode 3); the SMF selects the UPF SA and inserts the UPF ULC according to existing procedures.

Editor's note: Whether and If steps 5 and 6 can be combined into a single interaction is FFS.

Editor's note: Determination if support for both SSC mode 2 and 3 is FFS.

7. Media Bearer established.

6.3.1.3 Mobility Aspects

So long as the UE does not move to a RAN node outside the local network area, the existing mobility functions of the 5GC are used unchanged.

When the UE moves to a RAN node outside the local network area, the PCF informs the P-CSCF (via the event notify procedure), the P-CSCF then updates the DNAI for the localized routing, and triggers the re-allocation of the IMS

AGW; using either SSC mode 2 or 3 (depending on media and service type) the media is transitioned to the new IMS AGW and service continues. The UE retains the same IP address for the media flow and the IMS AGW provides any required mapping to/from IP addresses in the local network.

Editor's Note: Details of the IMS-AGW re-allocation procedure and how SSC modes 2 or 3 are used for mobility are FFS.

There is no support for EPC interworking, if the UE moves to a RAN node not connected to 5GC, the media session is terminated.

6.3.2 Impacts on existing nodes and functions

Editor's Note: Impacts to existing nodes and functions are FFS

6.3.3 Solution Evaluation

Since in release 15, AF influence of traffic routing is only defined in the non-roaming case and LBO roaming case, this solution is restricted to UEs located in their HPLMN (or equivalent).

Editor's Note: How (and if) the local P-CSCF in LBO roaming case can use this functionality is FFS.

Editor's Note: Additional evaluations are FFS

6.4 Solution 4: Multi-homing based PSA addition to the PDU Session for IMS for localized routing

6.4.1 Description

This solution corresponds to the Key Issue#1 "Routing of IMS traffic via a localized UPF".

To enable routing of IMS traffic via a localized UPF, "Single PDU Session with multiple PDU Session Anchors (PSA's)" can be used as described in clause 5.6.4 of TS 23.501 [3]. This localized routing can be achieved by the procedure defined in clause 4.3.5.4 of TS 23.502 [4]. Uplink Classifier (UL CL) based PSA addition has no UE impact while multi-homing based PSA addition has UE impact as described in steps 7 and 8 in Figure 4.3.5.4-1: Addition of additional PDU Session Anchor and Branching Point or UL CL of TS 23.502 [4].

When the UE acquires the new IP prefix due to multi-homing based PSA addition to the PDU Session for IMS, how the upper layer of the UE (i.e. IMS layer) can use the new IPv6 address should be defined. In particular, the UE does not have to perform IMS registration by using the new IPv6 address which means the new IPv6 address is used for IMS media routing via a localized UPF and not used for SIP signalling as illustrated in Figure 6.4.1-1.

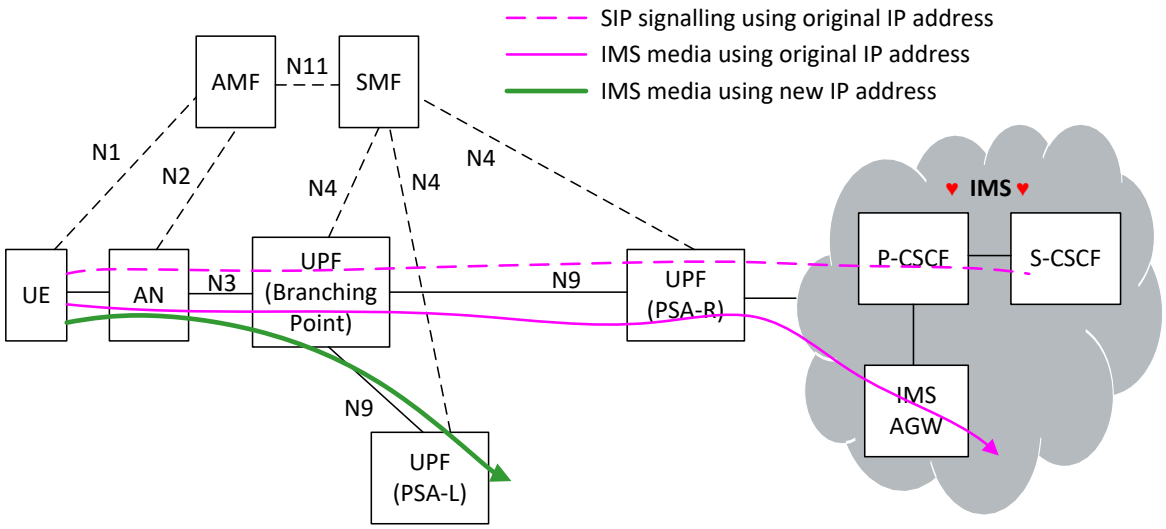

Figure 6.4.1-1: Routing of IMS media via a localized UPF with new IP address

Editor's note: It is FFS whether an IMS AGW is needed for gating control of media flows offloaded via PSA-L.

Editor's note: It is FFS how the IMS determines whether the remote party is reachable via the local address.

Editor's note: It is FFS how service continuity is ensured when the UE moves outside of the area served by the local PSA.

NOTE: Which IMS media can be locally routed by using the new IP address is based on UE policy.

In order to make the IMS layer's behaviour clear, it is proposed to get the NAS layer of the UE provide an indication that the new IPv6 address is only for IMS media to the IMS layer when the UE has acquired the new IP prefix due to multi-homing based PSA addition to the PDU Session for IMS.

Figure 6.4.1-2 is same as Figure 4.3.5.4-1: Addition of additional PDU Session Anchor and Branching Point or UL CL of TS 23.502 [4] and only step 7 has addition for the proposed solution.

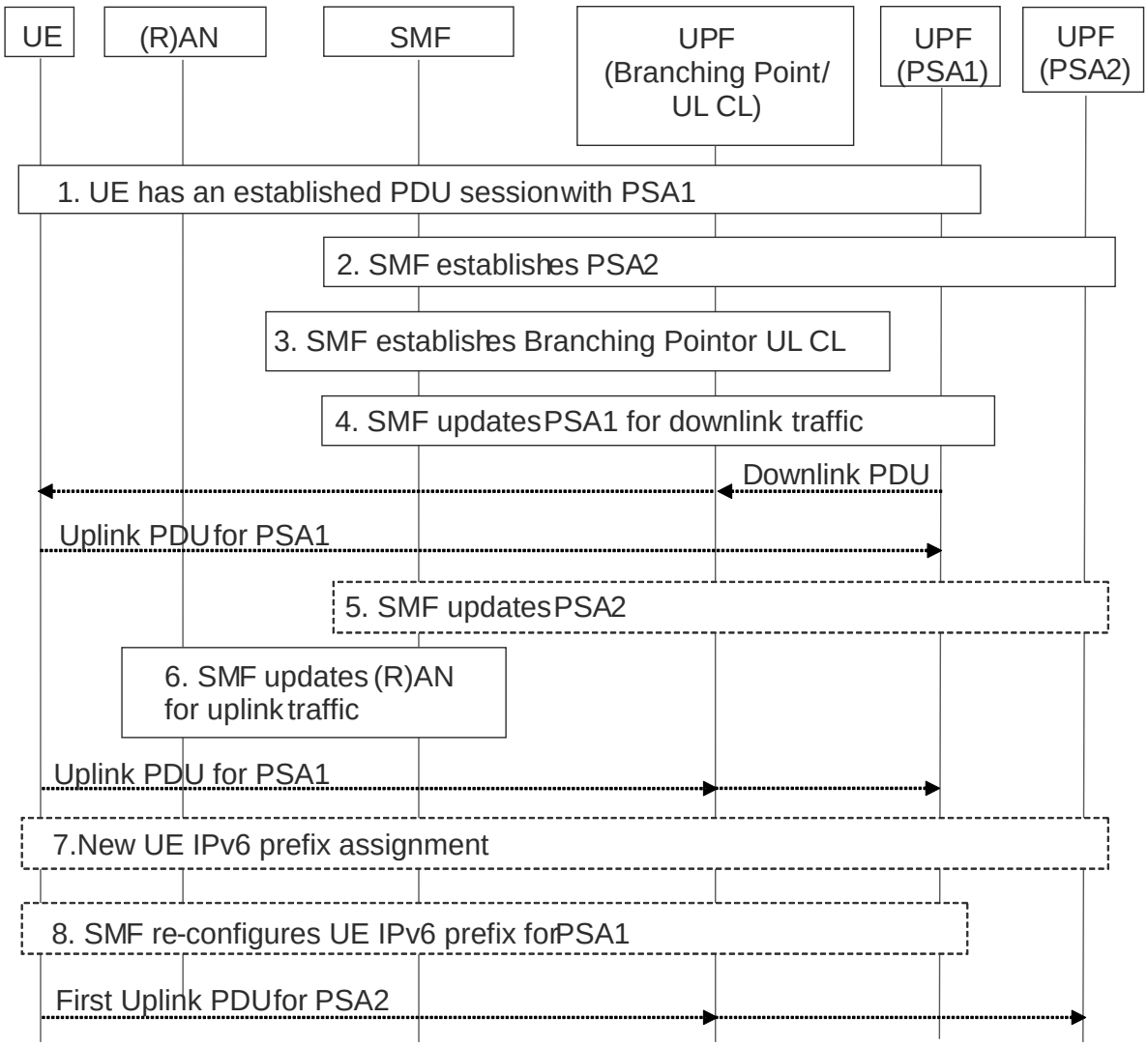

Figure 6.4.1-2: Multi-homing based PSA addition to the PDU Session for IMS for localized routing

For the proposed solution, step 7 has the following addition:

- The NAS layer of the UE provides the upper layer (i.e. IMS layer) with an indication that the new IPv6 address is only for IMS media.

6.4.2 Impacts on existing nodes and functions

UE:

- The NAS layer of the UE provides the upper layer (i.e. IMS layer) with an indication that the new IPv6 address is only for IMS media when the UE has acquired the new IP prefix due to multi-homing based PSA addition to the PDU Session for IMS.

- When the IMS layer of the UE receives the indication that the new IPv6 address is only for IMS media from the NAS layer, the UE does not perform IMS registration by using the new IPv6 address.

Core network:

- No impact.

IMS network:

- No impact.

6.4.3 Solution Evaluation

Editor's note: This clause provides an evaluation of the solution.

6.5 Solution 5: Routing of IMS traffic via a localised UPF with two IP addresses

6.5.1 Description

The solution addresses Key Issues #1.

Depicted in Figure 6.5.1-1 is a simplified architecture for routing of IMS traffic via localised UPFs (UPF-BP, UPF-SA) and IMS AGW with no more than two IP addresses. The objective is to offload selected IMS traffic flows as close to the network edge while enabling service continuity upon UE mobility. The figure is illustrated with a Multi-homed IPv6 PDU Session, however, the same can be achieved using multiple PDU Sessions.

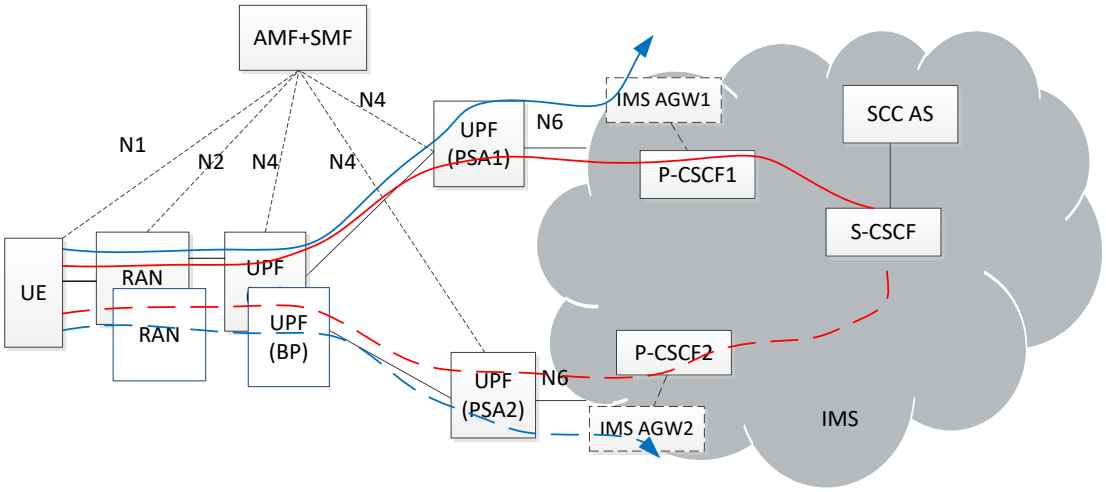

Figure 6.5.1-1: Routing of IMS traffic via a localised UPF with two IP addresses

The salient features of this solution approach are the following:

- UE uses a common IP address for SIP signalling (Gm) and user plane traffic.
- Most of the time UE uses only one IP address. The second IP address is used only to enable SSC mode 3 service continuity. After completion of service continuity, the old IP address is released.
- The P-CSCF in this approach can be (but does not have to be) located close to the network edge. An IMS AGW can be used for control of media flows.

Editor's note: It is FFS how P-CSCF discovery works when the additional prefix is assigned in a Multi-homed IPv6 PDU Session.

Editor's note: It is FFS how the localized IMS AGW selection works when the P-CSCF resides in a central location.

Consider the following scenario:

1. Initially UE is connected via PSA1. It is registered with the IMS via P-CSCF1. Both SIP and user plane traffic transit via PSA1. UE's IMS sessions are anchored in a Service Continuity Control Application Server (SCC AS) as described in TS 23.237 [6].

2. Due to UE mobility at some point, the network establishes PSA2 and assigns a second IP address/prefix to the UE as described in TS 23.502 [4] clause 4.3.5.2 ("Change of SSC mode 3 PDU Session Anchor with multiple PDU Sessions") or TS 23.502 [4] clause 4.3.5.3 ("Change of SSC mode 3 PDU Session Anchor with IPv6 Multi-homed PDU Session"). In either case the IMS client is provided with the information about how long the network is willing to keep the old PSA (PSA1) via the PDU Session Address Lifetime value provided in NAS signalling or via the valid lifetime parameter in Router Advertisement message.

3. Based on the information about the remaining lifetime of PSA1, the IMS client in the UE triggers another IMS registration via PSA2 and P-CSCF2.

4. After the new IMS registration is completed, the SIP client in the UE performs the PS-PS Access Transfer procedure described in TS 23.237 [6] to move all traffic flows from PSA1 to PSA2.

5. After all traffic is consolidated on PSA2, the SIP client releases the old registration via P-CSCF1 and PSA1 is also released.

6.5.2 Impacts on existing nodes and functions

6.5.3 Solution Evaluation

6.6 Solution 6: Routing of IMS traffic via a localised UPF with three IP addresses

6.6.1 Description

6.6.1.1 General

The solution addresses Key Issues #1.

Depicted in Figure 6.6.1.1-1 is a simplified architecture for routing of IMS traffic via localised UPFs (UPF-BP, UPF-SA) with no more than three IP addresses. The objective is to offload selected IMS traffic flows as close to the network edge while enabling service continuity due to UE mobility. The figure is illustrated with a Multi-homed IPv6 PDU Session, however, the same can be achieved using multiple PDU Sessions.

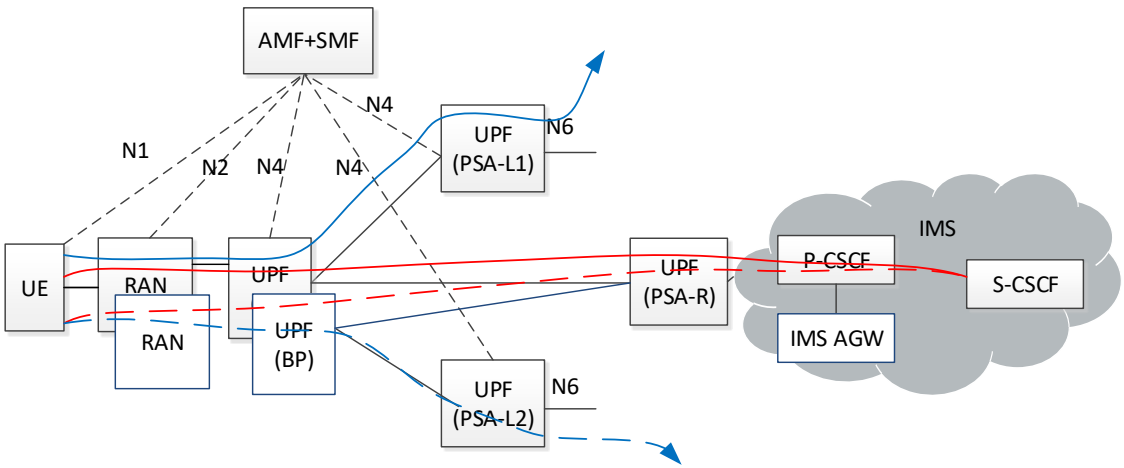

Figure 6.6.1.1-1: Routing of IMS traffic via a localised UPF with three IP addresses

The salient features of this solution approach are the following:

- UE uses a distinct IP address for SIP signalling (Gm) which is anchored in a remote IP anchor (PSA-R).
- User plane traffic that is offloadable is routed on an IP address/prefix that is anchored in a local IP anchor (PSA-L). Non-offloadable user plane traffic is routed via the remote IP anchor (PSA-R).
- Most of the time UE uses only two IP addresses: one for Gm and the other one for user plane traffic. The third IP address is used only to enable SSC mode 3 service continuity. After completion of service continuity, the old IP address for user plane traffic is released.
- The P-CSCF in this approach is located in a remote location.

Editor's note: It is FFS whether an IMS AGW is needed for gating control of media flows offloaded via PSA-L1 and PSA-L2. And if so, it is FFS how that IMS AGW is relocated by the P-CSCF.

Consider the following scenario:

1. Initially UE is connected via PSA-R for SIP signalling and PSA-L1 for user plane. Its registration with the IMS is always anchored via the same P-CSCF.
2. At some point the network establishes PSA-L2 and assigns a third IP address/prefix to UE as described in TS 23.502 [4] clause 4.3.5.2 ("Change of SSC mode 3 PDU Session Anchor with multiple PDU Sessions") or TS 23.502 [4] clause 4.3.5.3 ("Change of SSC mode 3 PDU Session Anchor with IPv6 Multi-homed PDU Session"). In either case the IMS client is provided with the information about how long the network is willing to keep the old local PSA (PSA-L1) via the PDU Session Address Lifetime value provided in NAS signalling or via the valid lifetime parameter in Router Advertisement message.
3. Based on the information about the remaining lifetime PSA1 the IMS client in the UE uses reINVITE to move all traffic flows from PSA-L1 to PSA-L2.
4. After all traffic is consolidated on PSA-L2, PSA-L1 is released.

6.6.1.2 Determining traffic offloadability

UE needs to be able to determine whether specific media flow is offloadable or not. The media flow is considered offloadable if it satisfies the following two conditions:

1. The media flow is "intrinsically offloadable" i.e. the network considers that it is acceptable for specific media types (e.g. video) to be routed via the Internet (instead of being routed via the operator's controlled IP transport network or the IPX).
2. The remote party is reachable via the local IP address.

Intrinsic offloadability can be determined either by DM configuration or by using the SIP Specific Event Notification framework as defined in RFC 6665 [8]. In the latter case a new event needs to be defined e.". "notification for intrinsically offloadable services or media ty"es".

The remote party reachability can be checked using the SIP OPTIONS capability exchange as described below. This procedure can be initiated any time during an established SIP media session (typically when the UE is assigned a local IP address).

Consider a scenario with two UEs: UE-A and UE-B, where UE-A has a local IP address (in addition to the IMS IP address that is used for Signalling) that can be used for traffic offload of "intrinsically offloadable" media flows. In contrast, UE-B has only the IMS IP address.

UE-A knows that it can offload traffic (i.e. it knows that it has "intrinsically offloadable" media flows) and triggers a SIP OPTIONS exchange with UE-B as follows:

```
UE-A --> SIP OPTIONS to UE-B
< … Other IP headers >
Supported: <feature = media_offload>
<SDP body of the message>
m1 audio (IMS IP address) [UE-A's IP address that is used for Signalling]
m2 video (IMS IP address) [UE-A's IP address that is used for Signalling]
m3 video (local IP address) [This is the local IP address of UE-A]
```

On receiving SIP OPTIONS, UE-B responds with 200 OK as follows:

```
UE-B -> 200 OK to UE-A
< … Other IP headers >
Supported: <feature = media_offload>

<SDP body of the message>
m1 audio (IMS IP address) [UE-B's IP address that is used for Signalling]
m2 video (IMS IP address) [UE-B's IP address that is used for Signalling]
m3 video (IMS IP address) [UE-B's IP address that is used for Signalling]
```

Even though UE-B has not indicated a local IP address, UE-A can still try to use its local IP address to reach UE-B on its IMS IP address.

UE-A first needs to perform a reachability check by sending a Ping message from its local IP address to UE-B's IMS IP address. If UE-B responds to Use'-A's Ping message, UE-A triggers a SIP reINVITE for "m3 video" media indicating UE-A's local IP address. UE-B acknowledges the message indicating UE-B's IMS IP address.

If at some point later UE-B acquires a local IP address, it can trigger the SIP OPTIONS exchange mechanism and perform the reachability check by sending a Ping message from its local IP address to UE-A's IMS IP address.

6.6.2 Impacts on existing nodes and functions

6.6.3 Solution Evaluation

6.7 Solution 7: IMS traffic local routing by applying AF influence mechanism

6.7.1 Description

This solution applies to Key Issue 1: Routing of IMS traffic via a localized UPF which will investigate the interactions required to leverage localized routing of IMS media and signalling traffic, the changes to enable effective control and management of such routing.

The 5GC enables to route traffic via localized UPF close to the edge of the network. Some IMS services may benefit from the lower latency and less backhaul resource usage resulted from such deployments, such as routing of IMS traffic (e.g. video) between two users using an efficient UP path when two users are served by one UPF and IMS-AGW and offloading IMS video traffic at a UPF closer to the UE.

The following figure shows how an efficient user plane path is created for IMS services.

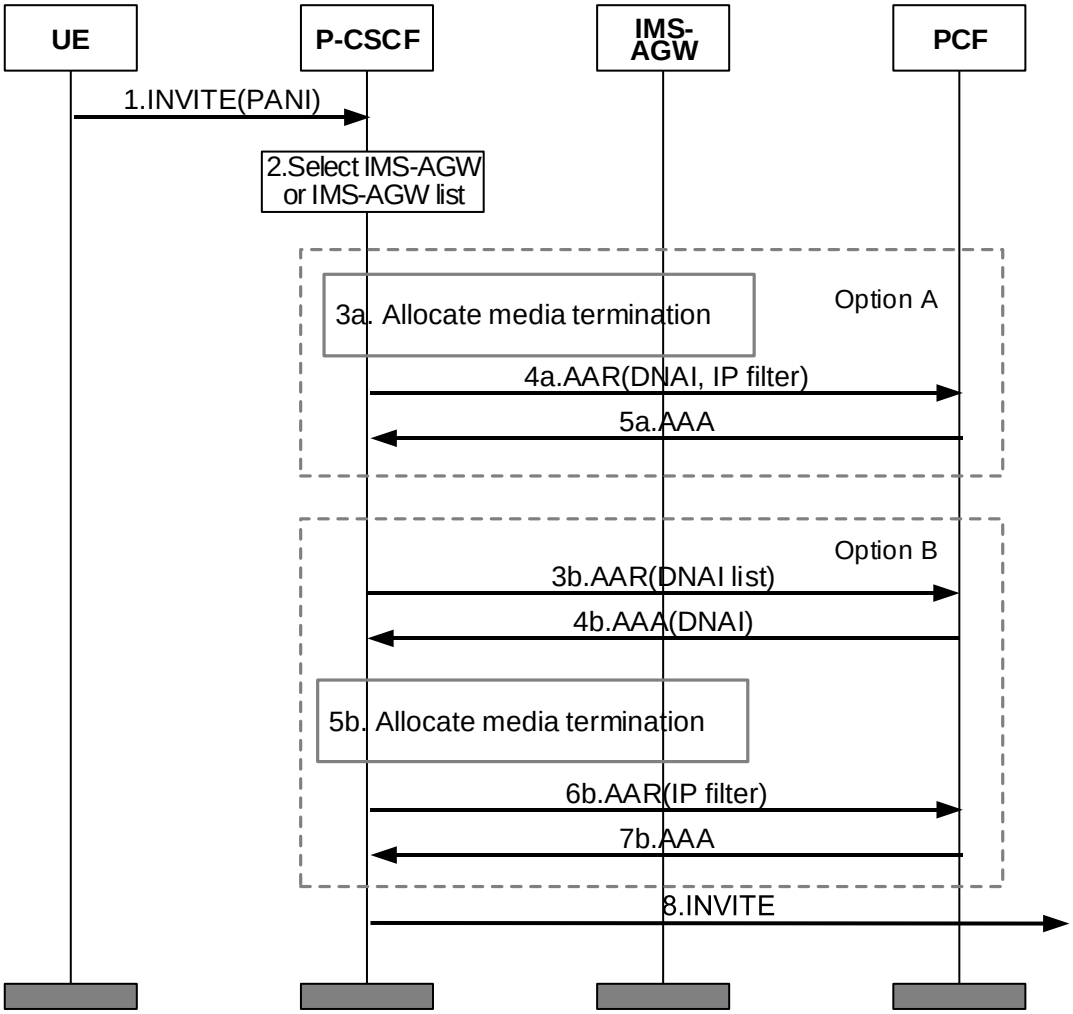

Figure 6.7.1-1: Procedure for IMS local routing

1. The UE sends SIP INVITE message with PANI and media feature tag, which includes ICSI or IARI, to initiate an originating call.

2. After receiving the SIP INVITE message, the P-CSCF selects an IMS-AGW or an IMS-AGW list according to UE's location information and requested services.

NOTE 1: The P-CSCF obtains the UE location from the received PANI or the P-CSCF can obtain the UE location via Rx/N5 interface from PCF using the existing UE location retrieval or subscription to notification mechanism during or after IM registration procedure.

NOTE 2: The mapping between the local IMS-AGW or IMS-AGW list corresponding to the IMS communication service or IMS application, i.e. ICSI or IARI included in the media feature tag, and the UE location, is configured in the P-CSCF.

OPTION A: If the P-CSCF selects an IMS-AGW, steps 3a-5a are performed.

3a. If the P-CSCF selects an IMS-AGW in step 2, e.g. in case there is only one IMS-AGW locally deployed, the P-CSCF allocates media termination via H.248 protocol between P-CSCF and IMS-AGW.

4a-5a. The P-CSCF sends AAR to the PCF with the selected DNAI, and/or IP filter information (e.g. 5 Tuple), and the policies to be applied to the corresponding PDU Sessions. The policies may influence the SMF to select a UPF which is closer to the IMS-AGW and the UE.

NOTE 3: This step applies the mechanism "Processing AF requests to influence traffic routing" as specified in TS 23.502 [4] clause 4.3.6.2, including the mapping of IMS-AGW address and DNAI.

NOTE 4: The 5GC will allocate a UPF according to the UE location and the selected DNAI.

Editor's note: How (from which configured/dynamic information) the P-CSCF determines the DNAI is FFS.

OPTION B: If the P-CSCF selects an IMS-AGW list, steps 3b-7b will be performed.

3b-4b. The P-CSCF sends AAR to the PCF with the selected DNAI list, and the policies to be applied to the corresponding PDU Sessions. The policies may influence the SMF to select a UPF which is closer to the IMS-AGW and the UE.

NOTE 5: This step applies the mechanism "Processing AF requests to influence traffic routing" as specified in TS 23.502 [4] clause 4.3.6.2 ", including the mapping of IMS-AGW address list and DNAI list.

NOTE 6: The 5GC will allocate a UPF/DNAI according to the UE location and the selected DNAI list.

Editor's note: How (from which configured/dynamic information) the P-CSCF determines the list of DNAI is FFS.

5b. When the P-CSCF receives the AAA message, and gets the selected DNAI by 5GC, it allocates media termination with the corresponding IMS-AGW via H.248.

6b-7b. The P-CSCF sends AAR to PCF with IP filter information (e.g. 5 Tuple) for policy decision.

8. The P-CSCF forwards the INVITE message to next node.

NOTE 7: The P-CSCF if supported interacts with the PCF by invoking the services of PCF via N5.

Editor's note: The impact on P-CSCF discovery and selection for IMS traffic local routing is FFS.

Editor's note: The procedure in case of UE mobility is to be provided.

Editor's note: Whether UP-re-anchoring is required and whether it should be done before or after IMS-AGW selection for both options is FFS.

6.7.2 Impacts on existing nodes and functions

Editor's note: This clause describes impacts to existing entities and interfaces.

6.7.3 Solution Evaluation

Editor's note: This clause provides an evaluation of the solution.

6.8 Solution 8: Application Function influence on network slice selection

6.8.1 Description

6.8.1.1 General

Solution is related to Key Issue #3

An Application Function (AF) can provide to the 5G core network information to assist in determining the 5GC slice required by a specific IMS service. The AF sends a request to the NEF, providing an IMS service profile, which requests to associate an IMS service (associated with an identifier e.g. with an App-id-4) with a certain IMS service profile and with a certain IMS application provider. This request may also include the external identity of a single UE (e.g. the MSISDN), or the external identities of multiple UEs. If no UEs are included, the request could affect all UEs associated (e.g. based on subscription) with the identified application provider.

The IMS service profile identifies one of the service profiles pre-agreed between the mobile operator and the IMS operator. How the IMS Service Profile is constructed is out of scope of 3GPP. An example list of pre-agreed service profiles is shown below

IMS Service Profile #1	Service Profile Id = 1010 Service Type = Voice Delay < 20 msec
IMS Service Profile #2	Service Profile Id = 1012 Service Type = Video Delay < 10msec
…	…

The AS maps the IMS service (App-id-4) to one of the pre-agreed service profiles based on the known characteristics of the IMS service, e.g. based on the type and/or the traffic requirements of the IMS service and sends the request to the UDM/UDR via the NEF.

The AS request (that associates an IMS service to an IMS service profile) to the NEF include:

- the IMS Service Id.
- the Service Profile Id.
- Information on the IMS Application provider.
- Optionally the affected UE(s) by providing an external identifier (e.g. MSISDN).

The UDM/UDR uses the IMS service profile id to derive the type of service required (i.e. Service Type: Voice, Delay Characteristics) and retrieve the appropriate NSSP policies.

NOTE: It is assumed that the UDR has pre-configured NSSP policies based on the service profile requested by the AF.

The PCF is notified of new UE Policies and delivers the updated UE Policies based on the Policy delivery mechanism described in TS 23.502 [4].

The IMS client in the UE checks the updated URSP policies in order to identify the PDU session to send the IMS traffic of a specific IMS service as illustrated below:

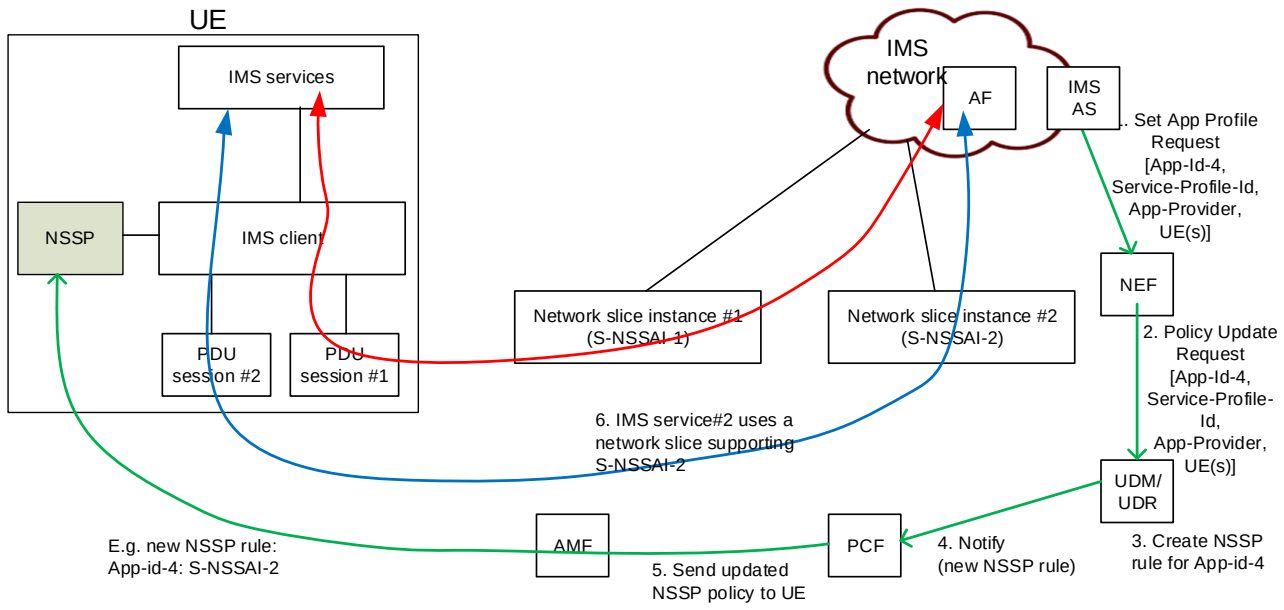

Figure 6.8.1.1-1: AF influencing URSP rules for network slice selection

Editor's note: The solution where the AF provides the IMS Service Profile directly to the UDM/UDR is FFS.

The procedure that enables this functionality is specified in the next clause.

6.8.1.2 Procedure for AF (IMS AS) to influence network slice selection

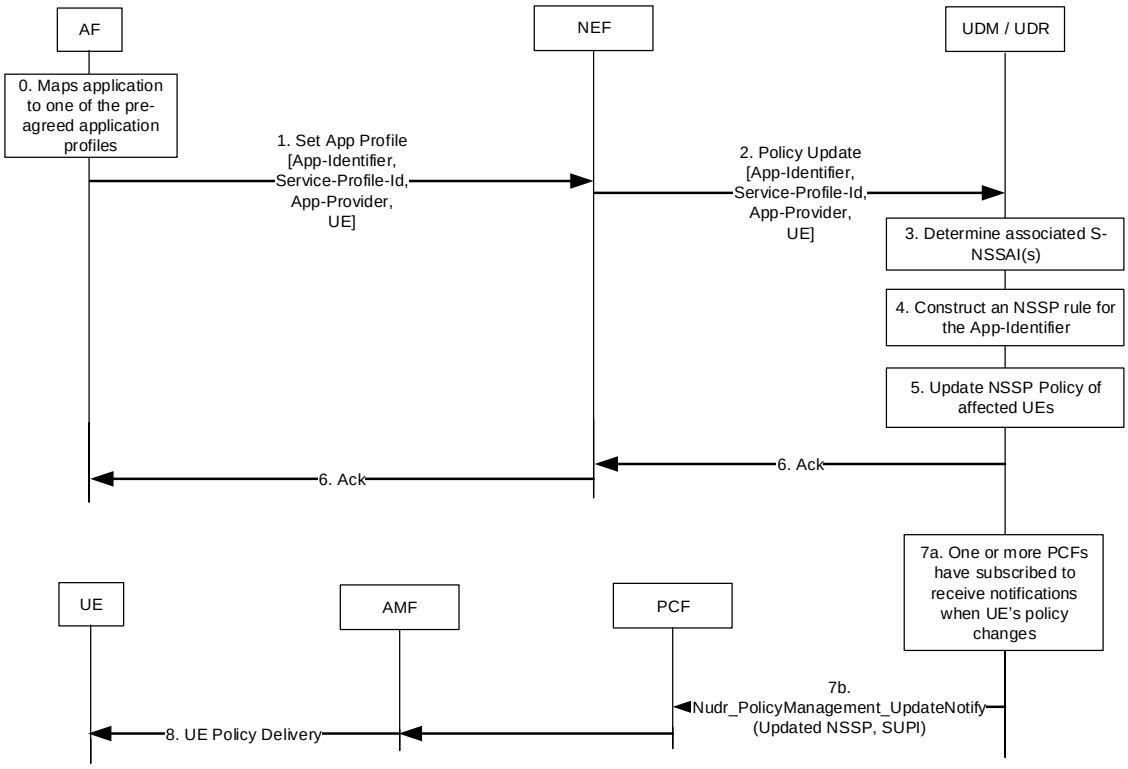

Fig. 6.8.1.2-1: Processing AF requests to influence network slice selection

0. The IMS AS maps an IMS service to one of the service profiles pre-agreed between the mobile operator and the IMS operator. This mapping can be based e.g. on the known traffic type and/or traffic requirements of the IMS service.

NOTE 1: The IMS service profiles pre-agreed between the mobile operator and the IMS operator are outside the scope of 3GPP.

1. An AF (IMS Application Server) calls the "Set Profile" service supported by NEF, which requests to associate the IMS service (a) with a certain service profile and (b) with a certain application provider. The IMS service is identified by an identifier (App-Identifier). The IMS Service Profile is identified by a Service Profile Id. The request may also include the external identity of a single UE (e.g. the MSISDN), or the external identities of multiple UEs. If no UEs are included, the request could affect all UEs associated (e.g. based on subscription) with the identified application provider. The IMS service profile is the one determined in the previous step and identifies one of the service profiles pre-agreed between the mobile operator and the AF operator.

Editor's note: It is FFS if this step requires a new NEF service to be specified or whether the Nnef_ParameterProvision_UpdateRequest (clause 4.15.6.2 of TS 23.502 [4]), can be re-used.

2. The NEF calls the "Nudm_SubscriberDataManagement" service supported by UDM, which requests to update the policy data (i.e. NSSP) of a single UE or of multiple UEs. The UDM maps each of the received external UE identities (e.g. MSISDNs) to a Subscriber Permanent Identity (SUPI).

Editor's note: It is FFS if the "Nudm_SubscriberDataManagement" service can be used to convey Application profile requirements.

3. Based on the received service profile and application provider, the UDM determines an S-NSSAI or a prioritized list of S-NSSAIs that should be associated with the identified application.

4. The UDM derives an NSSP rule for the identified IMS service using the S-NSSAI(s) determined in the previous step.

NOTE 2: It is assumed that the UDM/UDR has NSSP rules per IMS Service Profile type. Based on the IMS service profile requested by the AF the UDM/UDR will have an associated NSSP rule

5. The UDM identifies the affected UEs based on the UE identities received in step 2 and updates the NSSP policy for each one of these UEs. The NSSP policy for each UE is stored in UDR.

6. The UDM responds to the service request received in step 2 and, in turn, the NEF responds to the service request received in step 1.

7. The PCF(s) serving the affected UEs is notified of updated URSP rule using the Nudr_PolicyManagement_UpdateNotify service operation as described in clause 4.16.2.2 of TS 23.502 [4].

8. A PCF receiving the Notify message from UDM determines that new NSSP policy is available for the associated UE and sends the updated NSSP policy to UE via the AMF and the N1 interface. After the UE receives the updated NSSP policy, the UE shall attempt to send the traffic of the identified application over a PDU session that matches the S-NSSAI included in the updated NSSP policy.

NOTE 3: Impacts on IMS signalling are addressed in Solution 11

Editor's note:
- It is FFS for interoperability across multi-vendors whether coordination is needed between IMs ASs for IMS Service Profiles and IMS Service IDs (Application IDs).
- Impacts of slicing to IMS charging is FFS.

6.8.2 Impacts on existing nodes and functions

Editor's note: This clause describes impacts to existing entities and interfaces.

FFS.

6.8.3 Solution Evaluation

Editor's note: This clause provides an evaluation of the solution.

6.9 Solution 9: Enhancements to Npcf services to support IMS functionality

6.9.1 Description

This solution addresses the extensions required for Npcf service to support existing IMS procedures, related to Key Issue #7.

Table 6.9.1-1: Analysis of IMS functionality supported in Npcf service

IMS functionality	TS 23.503 [5] Functional description	Supported by Npcf authorization service	Enhancements to Npcf authorization service
Authorize QoS Resources, Resource Reservation. Enabling of media flows, Disabling of media flows, Revoke Authorization for Access Network resources, Indication release of QoS resources to the P-CSCF in TS 23.228 [2].	QoS control, Application Function NF functional description.	Request and revoke resource reservation, enabling and disabling flows is supported by Npcf_PolicyAuthorization Create/Update/Delete Service.	Indication of release of QoS resources needs to be included in the Npcf_PolicyAuthorization Service
Retrieve the user location and/or UE Time Zone information from the access network in TS 23.228 [2].	Access Network Info reporting		A new EventId needs to be included in the Npcf_PolicyAuthorizationSubscribe/Unsubscribe/Notify Service includes an EventId for requesting reporting of UE location and/or UE timezone.
Support for IMS Emergency in TS 23.167 [12].	Support for IMS Emergency		An emergency indicator needs to be included in Npcf_PolicyAuthorizationService Create Request. The SUPI, GPSI and PEI needs to be included in Npcf_PolicyAuthorizationService Create Response. The SUPI, GPSI and PEI needs to be included in Npcf_PolicyAuthorizationService Create Request include a Failure to report when a non IMS session is set upon an emergency APN.
Support for Multimedia Priority Service including MCPTT TS 23.228 [2].	MPS	MPS supported in TS 23.501 [3] in Rel-15. Npcf services supports MPS.	None.
Reporting change of Access Type, together with the Radio Access Technology to the P-CSCF.	Access Type with RAT reporting	Npcf service supports reporting of Access Type in TS 23.502 [4]: Npcf_PolicyAuthorizationService Subscribe includes an EventId for requesting reporting of Access Type together with the Radio Access technology to P-CSCF Npcf_PolicyAuthorizationService Notify includes an EventId for reporting of Access Type together with the Radio Access technology to P-CSCF	None,
Resource Sharing for Network Detected Concurrent Sessions in TS 23.228 [2].	Resource sharing for different AF sessions.		An indication per media flow (DL or UL or both) on whether resources may be shared needs to be included in Npcf_PolicyAuthorizationService Create/Update Request.

6.9.2 Impacts on existing nodes and functions

Editor's note: This clause describes impacts to existing entities and interfaces.

Npcf_PolicyAuthorization Service is impacted to support the functionality listed above in Table 1.

The P-CSCF is impacted to support Npcf_PolicyAuthorization service.

The PCF is impacted to support the extensions to Npcf_PolicyAuthorization service required for IMS functionality described above.

6.9.3 Solution Evaluation

Editor's note: This clause provides an evaluation of the solution.

6.10 Solution 10: Reuse of UDM services and operations for SBA-based Sh interface

6.10.1 Description

This solution addresses Key Issue 6 - explores mapping of existing Sh procedures to currently defined Nudm services and operations and introducing an SBA-based interface to HSS.

The Commands over Sh interface can be mapped to services and operations of UDM/HSS as shown in table 6.10.1-1:

Table 6.10.1-1

NF service	Service Operations	Example Consumer(s)	Mapping to Sh operations
Subscriber Data Management (UDM/HSS)	Get	AS	UDR/UDA
	Subscribe	AS	SNR/SNA
	Unsubscribe	AS	SNR/SNA
	Notification	AS	PNR/PNA, PUR/PUA

User-Identity as defined in the TS 29.329 [9] needs to be added as new input parameters for the above service and operations, and a new subscription data type for IMS Sh interface needs to be defined as below:

Table 6.10.1-2

Subscription data type	Field	Description
IMS Sh data	User-Identity	See definitions in TS 29.329 [9] Table 6.3.1.
	MSISDN	
	User-Data	
	Data-Reference	
	Service-Indication	
	Subs-Req-Type	
	Requested-Domain	
	Current-Location	
	Identity-Set	
	Expiry-Time	
	Send-Data-Indication	
	Server-Name	
	Supported-Features	
	Feature-List-ID	
	Feature-List	
	Supported-Applications	
	Public-Identity	
	DSAI-Tag	
	Wildcarded-Public-Identity	
	Wildcarded-IMPU	
	Session-Priority	
	One-Time-Notification	
	Requested-Nodes	
	Serving-Node-Indication	
	Repository-Data-ID	
	Sequence-Number	
	Pre-paging-Supported	
	Local-Time-Zone-Indication	
	UDR-Flags	
	Call-Reference-Info	
	Call-Reference-Number	
	AS-Number	
	OC-Supported-Features	
	OC-OLR	
	DRMP	
	Load	

6.10.2 Impacts on existing nodes and functions

Editor's note: This clause describes impacts to existing entities and interfaces.

6.10.3 Solution Evaluation

See clause 7.2

6.11 Solution 11: Procedure for UE to route IMS traffic via multiple 5GC network slices to the same IMS network

6.11.1 Description

6.11.1.1 General

This solution addresses both use cases of Key Issue#3 where the UE either routes IMS traffic via multiple slices to a single or multiple IMS networks.

The solution describes how the UE uses the URSP rules provided by the network to route IMS traffic.

It is proposed that all IMS signalling related information is conveyed to the IMS network via a default 5GC network slice and traffic associated to an IMS session may be routed via a different 5G network slice based on the application's requirements.

Such approach can be supported by provided to the UE appropriate URSP rules assisting the UE to determine the 5GC network slice to convey IMS signalling information and whether traffic associated with an IMS session (i.e. media information) should be routed via a different 5GC network slice.

When the UE routes IMS traffic via different 5G network slice to the same IMS network, the UE routes IMS signalling and media to separate PDU sessions taking into account the URSP rules as shown in the figure below:

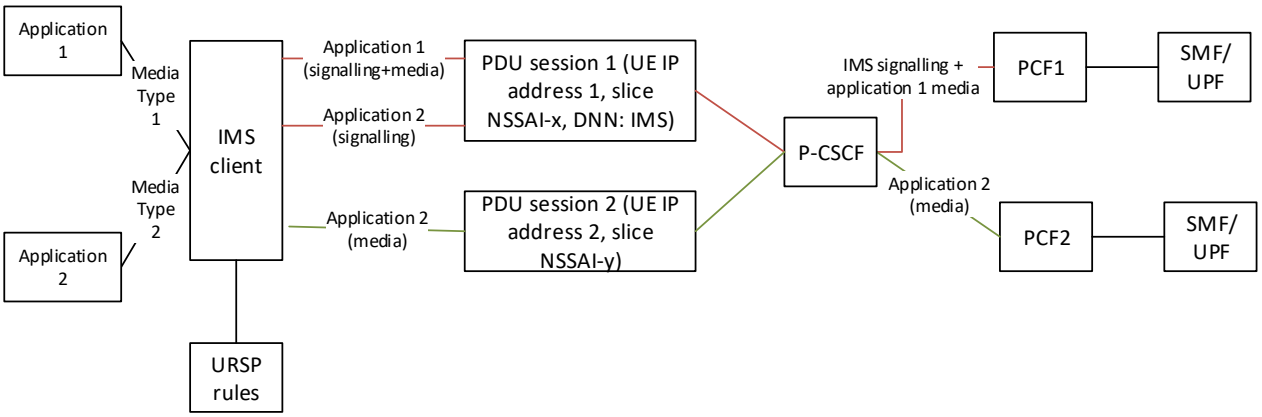

Figure 6.11.1.1-1: Routing media of an IMS session to a different 5G network slice based on URSP rules

The solution requires adding service type information to extend the application id information in URSP rule. Service type information can be used to distinguish among IMS signaling and IMS different media services.

Service type information is optional. When service type information of one application does not exist, it means that IMS signalling and media of the application go through the same 5GC slice.

Service type information can be used to represent IMS signaling with "IMS.signaling" string, and represent IMS media with "IMS.media" string. The IMS media string define the media type(s) that must be routed over a different slice (for example, Audio, Video).

The UE requires a URSP rule to determine the PDU session to send IMS signalling traffic towards the IMS network.

For example, a URSP rule may be provided indicating to the UE that signalling traffic related to an IMS application must be routed via a PDU session that points to a default slice towards the IMS DNN:

URSP rule 1:

- Traffic Descriptor:
  - Application ID.
  - Service Type: IMS.signaling.
- Route Selection Descriptor:
  - Network Slice Selection: S-NSSAI x.
  - DNN selection: IMS.

If an application requires media of an IMS session to be routed via a different slice, then the procedure described in clause 6.8.1.2 may be used where an IMS AS provides assistance information to the network to provide updated URSP rules to the UE.

For example, a URSP rule may be provided indicating to the UE that audio traffic related to IMS media must be routed via a PDU session that points to a different slice and specific DNN as shown below:

URSP rule 1:

- Traffic Descriptor:
  - Application ID
  - Service Type: IMS.media.Audio.
- Route Selection Descriptor.
  - Network Slice Selection: S-NSSAI y.
  - DNN selection: DNN x.

When an application requests to establish an IMS session, the UE, before sending the SIP INVITE request, checks the URSP rules to identify whether the media of the IMS signalling must be routed over a different slice. The UE can be configured to check the URSP rules when an IMS session is established based on:

- The ICSI/IARI of the service initiated.
- The type of media requested by the application.
- The application triggering the IMS session.

If there is a URSP rule that points to a different slice the UE check if there is an existing PDU session that matches the URSP rule description. Otherwise, the UE establishes a new PDU session request that satisfies the URSP rule.

The UE then uses the IP address of the second PDU session to construct an SDP offer that will be included in the SIP INVITE request towards the receiving entity. The UE sends the SIP INVITE request via the PDU session used for IMS signalling.

The P-CSCF, when processing the IMS request uses the UE IP address within the SDP offer as the source IP address of the UE when sending session information to the PCF either via Rx or N5. If there are multiple PCFs in the PLMN, the PCF is selected by the Binding Selection Function as described in clause 6.1.1.2 of TS 23.503 [5]. Based on the media resource requested the P-CSCF may select an AGW (e.g. for media transcoding). The P-CSCF selects the corresponding AGW for a 5GC network slice based on pre-configuration.

When the PCF receives the request from the P-CSCF the PCF determines the affected PDU session based on the UE IP address and provides the appropriate PCC rules to the SMF by invoking the Session Management Policy modification as described in clause 4.16.5 of TS 23.502 [4].

The SMF then performs an SMF-initiated PDU session modification procedure providing updated QoS rules for the IMS media traffic.

When the UE routes IMS traffic via different 5G network slice to separate IMS networks (i.e. the UE has two IMS subscriptions) an additional service type is required in the URSP rule to allow the UE to associate IMS signalling and/or session to a specific subscription. An additional field is added on the URSP "service type" to link IMS signalling or traffic associated to an IMS session to an IMS subscription. It is proposed to use the user's IMPI for this purpose. Based on the user's IMPI the UE then uses the route selection descriptor of the URSP rule to associate the IMS traffic to a PDU session.

NOTE: In case the SIP message only contains the public identify (IMPU) of the user, the UE can still derive the private identity (IMPI) associated to this IMPU.

An example of a URSP rule is as follows:

URSP rule x:

- Traffic Descriptor:

`- Service Type: IMS.media.Audio.

- Service Type: IMS.subscription.IMPI x.

- Route Selection Descriptor:

  - Network Slice Selection: S-NSSAI y (dedicated slice for audio media).

  - DNN selection: DNN x.

For this scenario the IMS signalling and media traffic is routed via PDU sessions towards the different IMS networks as shown below:

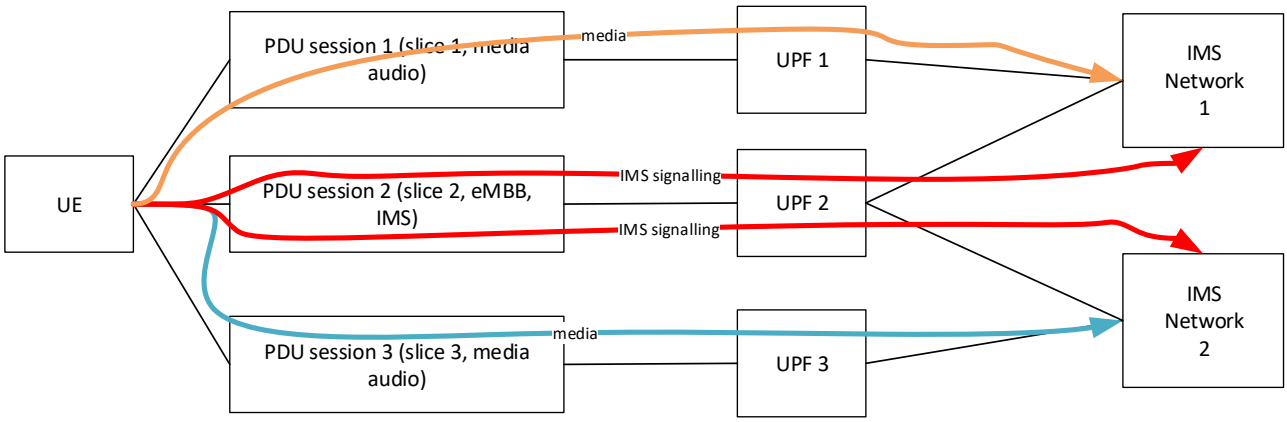

Figure 6.11.1.1-2: Routing media of different IMS subscriptions via multiple 5GC network slices based on URSP rules

6.11.1.2 Procedure to route IMS traffic via different 5GC network slice

The following call flow describes the procedure for the case where the UE routes IMS traffic via different network slices to a single IMS network:

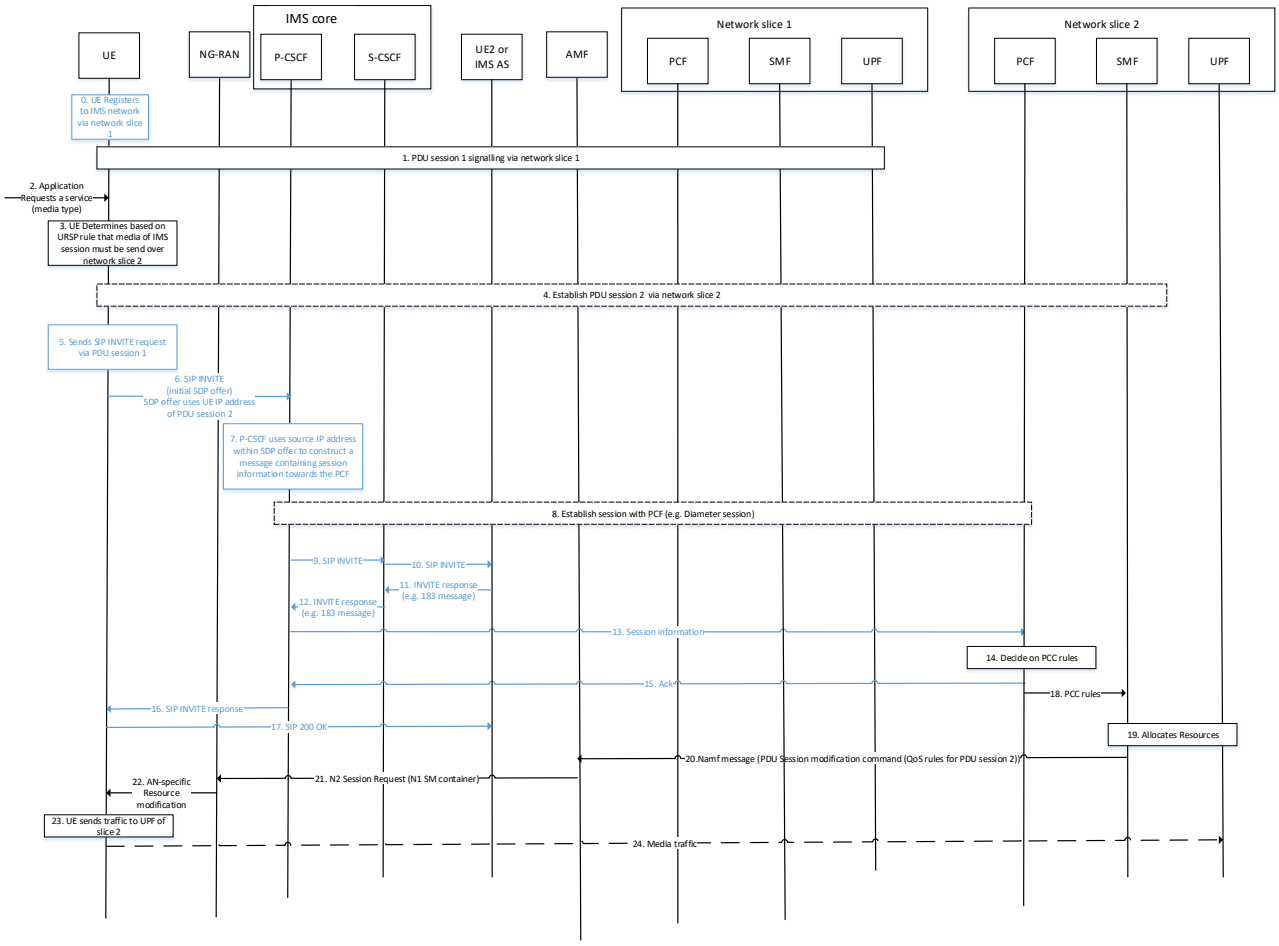

Fig 6.11.1.2-1: Procedure to establish an IMS session where media are routed over a different 5G network slice

The steps required are as follows:

0. The UE registers to the IMS network via network slice 1.

1. The UE establishes a PDU session 1 via network slice 1 where all IMS signalling is routed.

2. An application in the UE requests to establish an IMS session.

3. The UE determines based on the URSP rules that the requested media of the IMS session must be sent via a different PDU session to 5G network slice 2.

4. The UE establishes PDU session 2 via network slice 2 based on the rules of the selected URSP rule.

5. The UE constructs a SIP INVITE request that is routed via PDU session 1 (to network slice 1).

6. The UE sets the source address in the SDP offer of the SIP INVITE request the UE IP address of PDU session 2.

7. The P-CSCF receives the SIP INVITE requests and uses the source IP address within the SDP offer as the source UE IP address when sending session information to the PCF.

8. After the PCF is selected (e.g. by the BSF), the P-CSCF establishes an initial session with the PCF (e.g. a Diameter session).

9-12. Steps 9 to 12: The INVITE request with the SDP offer is routed via the IMS network to the target recipient and the target recipient provides the response to the SDP offer.

13. When the P-CSCF receives the response to the INVITE request (e.g. a 183 Session Progress) the P-CSCF provides the session information (included within the SDP negotiation) to the PCF (of network slice 2).

14. The PCF decides on PCC rules taking into account the session information provided by the P-CSCF.

15. The PCF acknowledge reception of the SDP session information.
16. The P-CSCF forwards the response to the SIP INVITE to the source UE.
17. The UE sends a SIP 200 OK message via PDU session 1 (to network slice 1).
18. The PCF sends the PCC rules to the SMF.
19. The SMF allocates the required resources based on the PCC rules .
20. SMF starts a network-initiated PDU session modification request (PDU session 2) as described in clause 4.3.3.2 of TS 23.502 [4].
21. The AMF forwards the PDU session medication command message within an N2 request as described in clause 4.3.3.2 of TS 23.502 [4].
22. The RAN node carries out the appropriate AN procedure to inform the UE of the PDU session modification.
23. The sends the media of the IMS session via PDU session 2.

NOTE: The procedure for the case where the UE routes IMS traffic via different 5G network slices to different IMS network is the same.

6.11.2 Impacts on existing nodes and functions

The impacts on IMS are as follows:

- UE
  - UE checks the URSP rules every time an IMS session is established.
  - Alternatively, the UE can be configured for which IMS sessions, e.g. based on the ICSI/IARI, whether the URSP rules must be checked.
- P-CSCF
  - P-CSCF is configured to check the source UE IP address within the SDP offer when providing session information to the PCF.

The impacts on the 5GC are as follows:

- URSP rules are updated with new traffic descriptor for media and IMS service identifier.

6.11.3 Solution Evaluation

Editor's note: This clause provides an evaluation of the solution.

6.12 Solution 12: New SBA services dedicated for Cx Operations

6.12.1 Solution overview

This solution addresses key issue 5 and is based on using new and specific SBA service operations optimized for Cx interactions with CSCF in IMS.Existing Release 15 UDM services are not optimized for Cx operations. This leads to the increased number of transactions that would be required for IMS procedures using Release 15 UDM services. In addition, the services themselves must be modified considerably to handle Cx specific operations. Finally, any updates to UDM services would impact IMS even though they maybe unrelated to IMS.

6.12.1.2 IMS Ncx Services

6.12.1.2.1 Current Cx Services

Table 6.12.1.2.1-1 illustrates existing Cx Diameter operations and their service grouping according to TS 29.229 [11].

Table 6.12.1.2.1-1

Command-Name	Abbreviation	Service Grouping	Source	Dest.
User-Authorization-Request	UAR	User Authorization	I-CSCF	HSS
User-Authorization-Answer	UAA		HSS	I-CSCF
Push-Profile-Request	PPR	User Data Handling	HSS	S-CSCF
Push-Profile-Answer	PPA		S-CSCF	HSS
Server-Assignment-Request	SAR	Registration/deregistration,	S-CSCF	HSS
Server-Assignment-Answer	SAA		HSS	S-CSCF
Registration-Termination-Request	RTR	HSS initiated deregistration	HSS	S-CSCF
Registration-Termination-Answer	RTA		S-CSCF	HSS
Location-Info-Request	LIR	Location Management	I-CSCF	HSS
Location-Info-Answer	LIA		HSS	I-CSCF
Multimedia-Auth-Request	MAR	IMS Authentication	S-CSCF	HSS
Multimedia-Auth-Answer	MAA		HSS	S-CSCF

6.12.1.2.2 Dedicated Ncx Services

NOTE: During the normative phase the agreed upon naming conventions shall be followed.

Table 6.12.1.2.2-1 illustrates the Ncx service operations dedicated to support Cx existing operations

Table 6.12.1.2.2-1

Command-Name - Cx	Source-Dest	NF Service	Comment
Server-Assignment-Request/Answer (SAR-SAA)	S-CSCF - HSS	Ncx_IMSRegistration_Register	Registration, profile download and implicit subscription to notification of profile updates
		Ncx_IMSRegistration_Deregistration	SAR in context of deregistration. SAR in context of P-CSCF restoration. Implicit unsubscribe to notification of profile updates
Registration-Termination-Request/Answer (RTT/RTA)	HSS - S-CSCF	Ncx_IMSRegistration_DeregisterNotification	NW initiated deregistration. Implicit unsubscribe to notification of changes to subscriber profile
Location-Info-Request/Answer (LIR/LIA)	I-CSCF - HSS	Ncx_IMSRegistration_Get	Retrieval of S-CSCF serving the User.
Push-Profile-Request/Answer (PPR/PPA)	HSS - S-CSCF	Ncx_IMSRegistration_UpdateNotification	Notification of profile updates
User-Authorization-Request/Answer (UAR/UAA)	I-CSCF - HSS	Ncx_IMSRegistration_Get	Retrieval of S-CSCF serving the User or S-CSCF capabilities.
Multimedia-Auth-Request/Answer (MAR/MAA)	S-CSCF - HSS	Ncx_IMSAuthentication_Get Ncx_IMSRegistration_Register	Retrieval of user's authentication information (e.g. AKA AV) Used for temporal S_CSCF registration

Editor's note: The handling of S-CSCF Restoration use case is FFS.

6.12.1.3 IMS procedure examples using SBA (Ncx Service Operations)

The following call flows illustrates some examples of IMS procedures based on the above mapping table.

NOTE: UDM selection is not shown in all call flows.

6.12.1.3.1 IMS Initial Registration

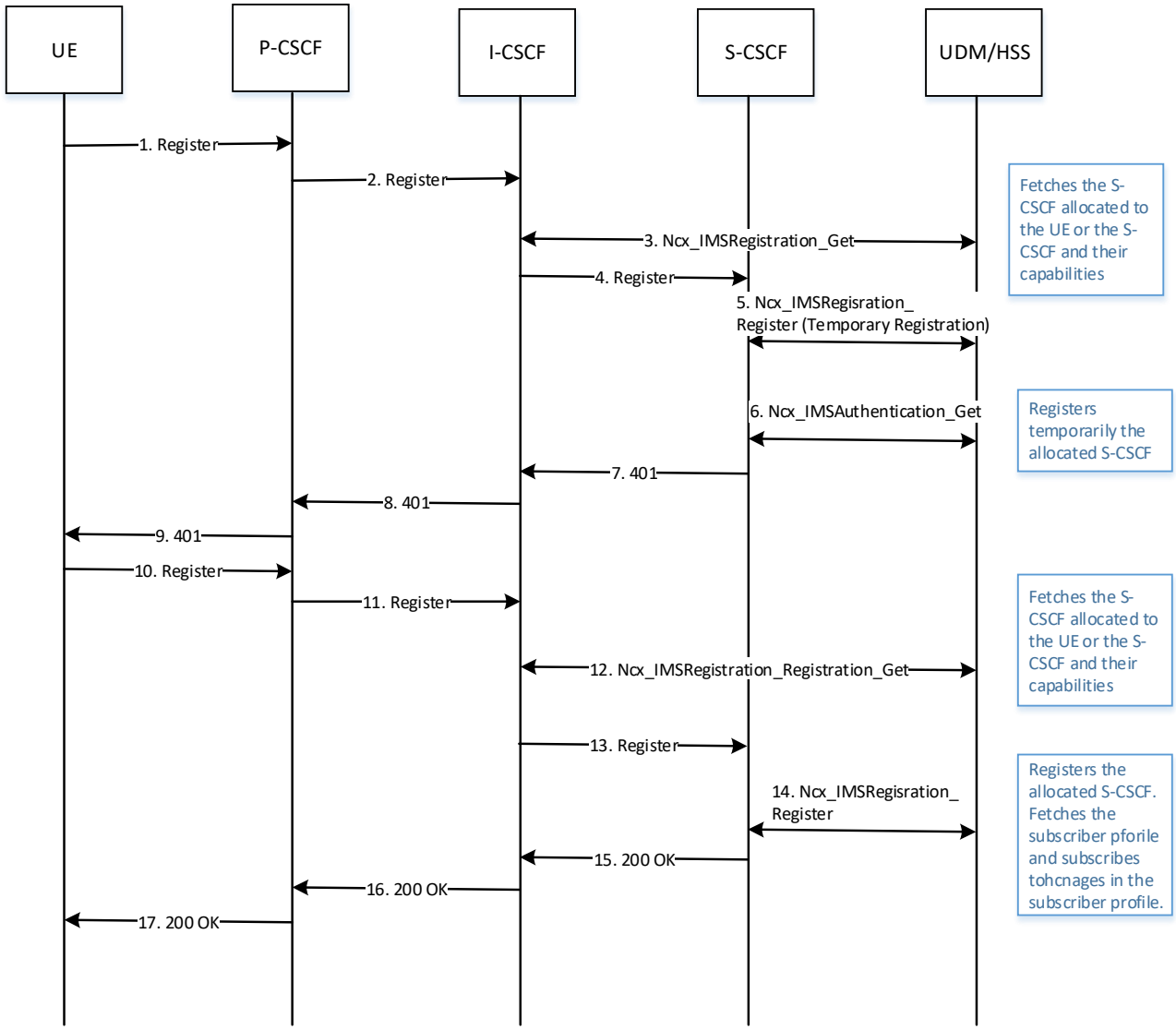

Figure 6.12.1.3.1-1: IMS initial Registration using new Ncx services with CSCF

The following is a brief description of the steps in the call flow:

1. After the UE has obtained IP connectivity, it can perform IMS registration. To do so, the UE sends the Register information flow to the P-CSCF.

2. The P-CSCF shall send the Register information flow to the I-CSCF.

3. The I-CSCF shall fetch the context information for the registering IMPU/IMPI by sending a Ncx_IMSRegistration_Get Request to the UDM/HSS. UDM/HSS checks if the IMPU/IMPI pair is registered, and the response is returned in Ncx_Registration Response. Since no S-CSCF name is returned, the I-CSCF shall use the returned S-CSCF capability information to select a S-CFCF.

4. The I-CSCF forwards the Register request to the selected S-CSCF.

5. The S-CSCF shall temporarily register the IMPI/IMPU context information (selected S-CSCF) in UDM/HSS, by sending to UDM/HSS the Ncx_IMSRegistration_Register request.

6. S-CSCF fetches the authentication information from UDM/HSS by sending to UDM/HSS Ncx_IMSAuthentication_Get Request and receiving the information in Ncx_IMSAuthentication_Get response.

7. The S-CSCF returns a 401 response to the I-CSCF.

8. I-CSCF forwards the 401 response to P-CSCF.
9. P-CSCF forwards the 401 response to UE.
10. The UE includes the required authentication information in a new Register request to the P-CSCF
11. P-CSCF forwards the Register request to I-CSCF.
12. The I-CSCF shall fetch the context information for the registering IMPU/IMPI pair by sending a Ncx_IMSRegistration_Get request to the UDM/HSS. UDM/HSS checks if the IMPU/IMPI pair is registered, and in this case returns the allocated S-CSCF name in the Ncx_IMSRegistration_Get Response.
13. The I-CSCF forwards the Register request to the S-CSCF.
14. After successful validation of UE authorization related information, the S-CSCF shall register the IMPI/IMPU context information in UDM/HSS, by sending to UDM/HSS the Ncx_IMSRegistration_Register request.
15. The S-CSCF returns a 200 OK to the I-CSCF.
16. I-CSCF forwards the 200 OK to the P-CSCF.
17. The P-CSCF forwards the 200 OK to the UE.

6.12.1.3.2 Subsequent IMS Registration

The next call flow illustrates a subsequent registration to refresh the registration. The call flow is self-explanatory and the steps won't be described further.

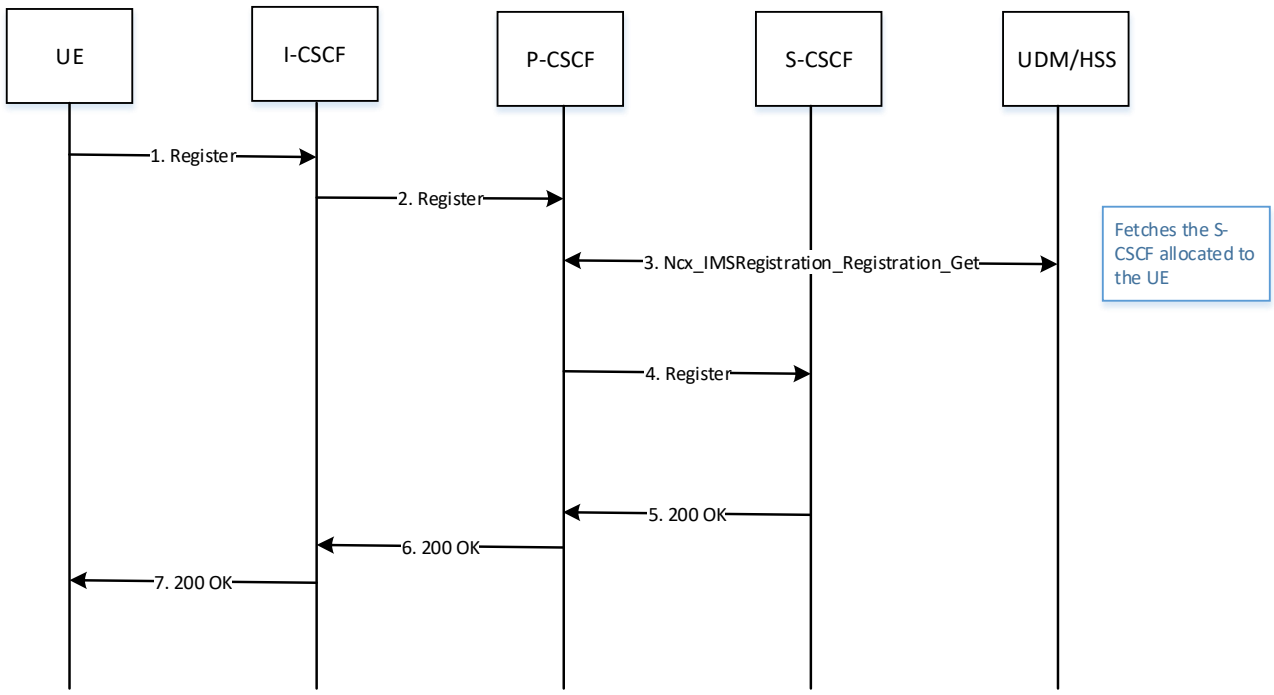

Figure 6.12.1.3.2-1: IMS subsequent Registration using new Ncx services with CSCF

6.12.1.3.3 Network Initiated De-Registration

The next call flow illustrates a network initiated de-registration.

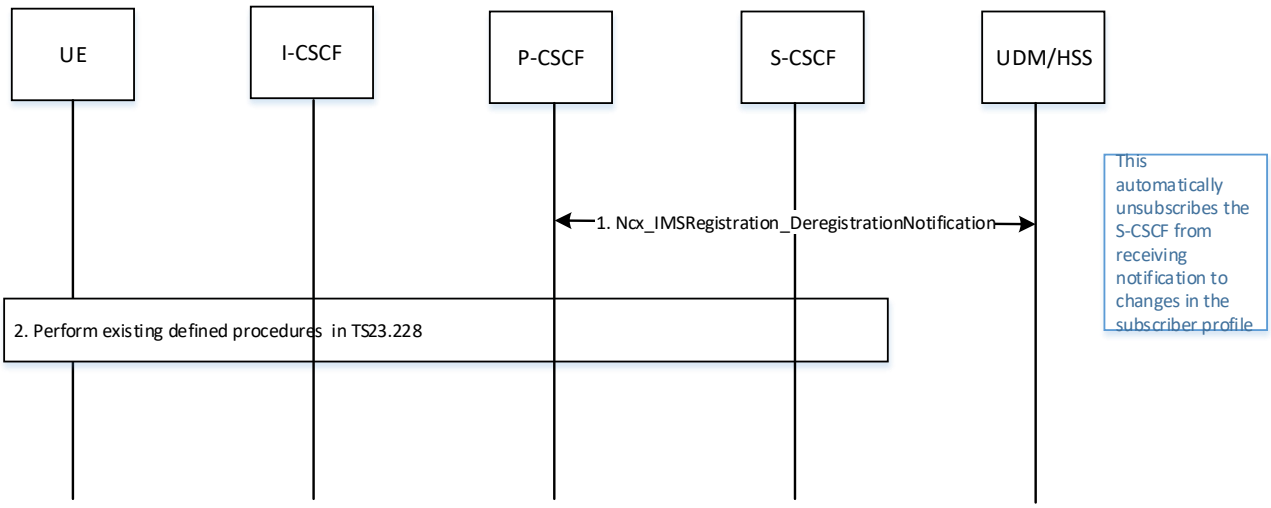

Figure 6.12.1.3.3-1: Network initiated de-registration using Ncx services with CSCF

The following is a brief description of the steps in the call flow:

1. Due to administrative action, the UDM/HSS issues to the S-CSCF a Ncx_IMSDeregistrationNotification.
2. S-CSCF performs the procedures defined in TS 23.228 [2]. This automatically unsubscribes the S-CSCF from receiving any notifications to changes in subscriber profile.

6.12.1.3.4 P-CSCF Restoration (HSS Option)/S-CSCF initiated Deregistration

The next call flow illustrates P-CSCF restoration based on HSS option.

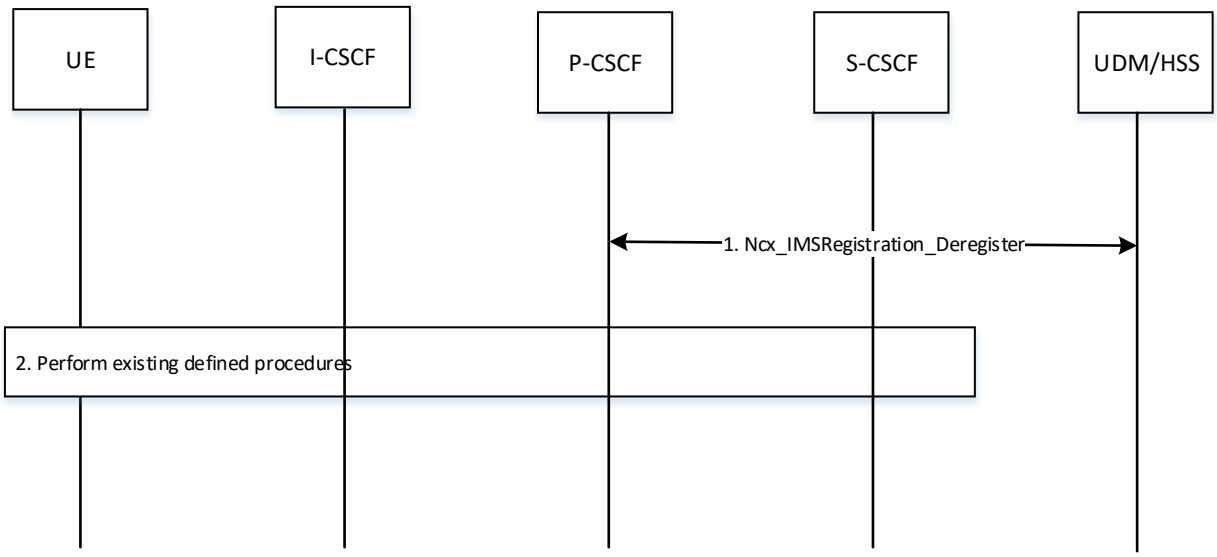

Figure 6.12.1.3.4-1: P-CSCF Restoration using Ncx services with CSCF

The following is a brief description of the steps in the call flow:

1. Two cases can trigger this step. In case 1, S-CSCF detects from a terminating session that P-CSCF is not responding. The S-CSCF sends to UDM/HSS a Ncx_IMSRegister_Deregister request. In case2, the S-CSCF decides to deregister a user and informs HSS. In either case, this step automatically unsubscribes the S-CSCF from receiving any changes to the subscriber profile.
2. UE may initiate a new Re-registration as per existing procedures.

6.12.1.4 IMS Ncx service Operations dedicated to Cx

Based on the above, the following is a summary of the IMS Ncx service operations dedicated to Cx current functions.

Table 6.12.1.4-1

Service Name	Service Operations	Operation Semantics	Example Consumer(s)
Ncx_IMSRegistration	Get	Request/Response	S-CSCF, I-CSCF
	Register	Request/Response	S-CSCF
	Deregister	Request/Response	S-CSCF
	DeregistrationNotification	Subscribe/Notify	S-CSCF
	UpdateNotification	Subscribe/Notify	S-CSCF
Ncx_IMS Authentication	Get	Request/Response	S-CSCF

6.12.2 Impacts on existing nodes and functions

Editor's note: This clause describes impacts to existing entities and interfaces.

6.12.3 Solution Evaluation

See clause 7.1.

6.13 Solution 13: Reuse services and operations of UDM and NRF for SBA-based Cx interface

6.13.1 Description

This solution addresses Key Issue 5 - explores mapping of existing Cx procedures to currently defined services and operations of Nudm and Nnrf.

To reuse the currently defined 5GC services for SBA-based Cx, the mapping between 5GC service operations and Cx commands as defined in the TS 29.228 [10] and TS 29.229 [11] are shown below:

Table 6.13.1-1: NF services provided by UDM

NF service	Service Operations	Operation Semantics	Example Consumer(s)	Mapping of Cx commands	Comments
Subscriber Data Management (SDM)	Get	Request/Response	AMF, SMF, SMSF, I-CSCF, S-CSCF	SAR/SAA,UAR/UAA, LIR/LIA	Subscription(IRS, Alias), Subscriber data, Location retrieval
	Subscribe	Subscribe/Notify	AMF, SMF, SMSF, S-CSCF	SAR/SAA	S-CSCF assignment
	Unsubscribe	Subscribe/Notify	AMF, SMF, SMSF, S-CSCF	SAR/SAA	S-CSCF assignment
	Notification	Subscribe/Notify	AMF, SMF, SMSF, S-CSCF	RTR/RTA, PPR/PPA	Subscription modification, Subscriber data modification
UE Context Management (UECM)	Registration	Request/Response	AMF, SMF, SMSF, S-CSCF	SAR/SAA	UE Registration binding
	DeregistrationNotification	Subscribe/Notify	AMF, S-CSCF	RTR/RTA	Notify of Registration state changing
	Deregistration	Request/Response	AMF, SMF, SMSF, S-CSCF	SAR/SAA	Registration binding
	Get	Request/Response	NEF, SMSF, GMLC, S-CSCF	SAR/SAA	P/S Restoration, Location information from UDM
	Update	Request/Response	AMF, SMF, S-CSCF	SAR/SAA	Update IMS Restoration, Registration binding Put data: P/S-CSCF Restoration, IMS subscriber registration state, IMS UE addressing
UE Authentication	Request	Request/Response	AUSF, S-CSCF	MAR/MAA	Authentication vectors, IK/CK for secure access
EventExposure	Subscribe	Subscribe/Notify	NEF		
	Unsubscribe		NEF		
	Notify		NEF		
Parameter Provision	Update	Request/Response	NEF		

Table 6.13.1-2: NF services provided by NRF

Service Name	Service Operations	Operation Semantics	Example Consumer(s)	Mapping of Cx operation	Comments
Nnrf_NFManagement	NFRegister	Request/Response	AMF, SMF, UDM, AUSF, NEF, PCF, SMSF, NSSF, S-CSCF	N/A	S-CSCF capabilities, NF service status of S-CSCF
	NFUpdate	Request/Response	AMF, SMF, UDM, AUSF, NEF, PCF, SMSF, NSSF, S-CSCF	N/A	S-CSCF capabilities, NF service status of S-CSCF
	NFDeregister	Request/Response	AMF, SMF, UDM, AUSF, NEF, PCF, SMSF, NSSF, S-CSCF	N/A	S-CSCF capabilities, NF service status of S-CSCF
	NFStatusSubscribe	Subscribe/Notify	AMF, SMF, PCF, NEF, NSSF, SMSF, AUSF, I-CSCF	UAR/UAA, LIR/LIA	S-CSCF selection
	NFStatusNotify		AMF, SMF, PCF, NEF, NSSF, SMSF, AUSF, I-CSCF	UAR/UAA, LIR/LIA	S-CSCF selection
	NFStatusUnSubscribe		AMF, SMF, PCF, NEF, NSSF, SMSF, AUSF, I-CSCF	UAR/UAA, LIR/LIA	S-CSCF selection
Nnrf_NFDiscovery	Request	Request/Response	AMF, SMF, PCF, NEF, NSSF, SMSF, AUSF, I-CSCF	UAR/UAA	S-CSCF selection

The current 5GC service operations are extended with extra input and output parameters to address IMS's requirement. Additionally, the service operations of UDM and NRF need to support Cx messages elements as specified in TS 29.228 [10] and TS 29.229 [11]. As an example, the modification of Nudm_UECM_registration defined in the TS 23.502 [4] is shown below:

5.2.3.2.1 Nudm_UECM_Registration service operation

Service operation name: Nudm_UECM_Registration

Description: Register UE's serving NF (if NF Type is AMF, SMSF) or Session's serving NF (if NF Type is SMF) or UE's S-CSCF Name (if NF Type is S-CSCF) on the UDM. This operation implies the following:

- *The authorization to provide subscription data for the corresponding NF consumer and the UE/Session context (identified by input parameters). If this is successful the consumer is set as a serving NF for the corresponding UE/Session context.*
- *When the consumer is AMF, it is implicitly subscribed to be notified when it is deregistered in UDM. This notification is done by means of Nudm_UECM_DeregistrationNotification operation.*

Inputs, Required for 5GC: NF ID, SUPI, PEI, NF Type, Access Type (if NF Type is AMF), PDU Session ID (if NF Type is SMF). If NF Type is SMF: DNN or Indication of Emergency Services.

Inputs, Required for IMS if NF Type is S-CSCF: Serve-NamePublic-Identity, Server-Assignment-Type.

Inputs, Optional for 5GC: None.

Inputs, Optional for IMS if NF Type is S-CSCF: Wildcarded-Public-Identity, SCSCF-Restoration-Info, Session-Priority.

Outputs, Required: Result indication.

Outputs, Optional: None.

The solution reuses the services and operations of UDM and NRF, with extension of input/output parameters for SBA-based Cx interface.

Editor's note: The impact of using NRF for S-CSCF discovery, on S-CSCF restoration procedure is FFS.

Editor's note: An IMS procedure example needs to be added to show how these services and operations provided by Nudm and Nnrf can be utilized by the IMS network, e.g. in the IMS registration procedure.

6.13.2 Impacts on existing nodes and functions

Editor's note: This clause describes impacts to existing entities and interfaces.

6.13.3 Solution Evaluation

See clause 7.1.

6.14 Solution 14: IMS utilize services provided by Npcf

6.14.1 Description

This solution addresses Key Issue 7 - How can IMS utilize services provided by Npcf.

In IMS network, the P-CSCF needs to be notified of some events related to access network, e.g. UE location information and other access network related events. This information will be used in IMS network for billing, LI, service trigger and so on. In VoLTE network, the P-CSCF subscribes to notification of these events over Rx interface. Since 5GC supports SBI, this solution proposes that the IMS utilizes services provided by Npcf to subscribe to notification of these events.

Figure 6.14.1-1 illustrates how P-CSCF utilizes services provided by Npcf to subscribe to notification of UE location information.

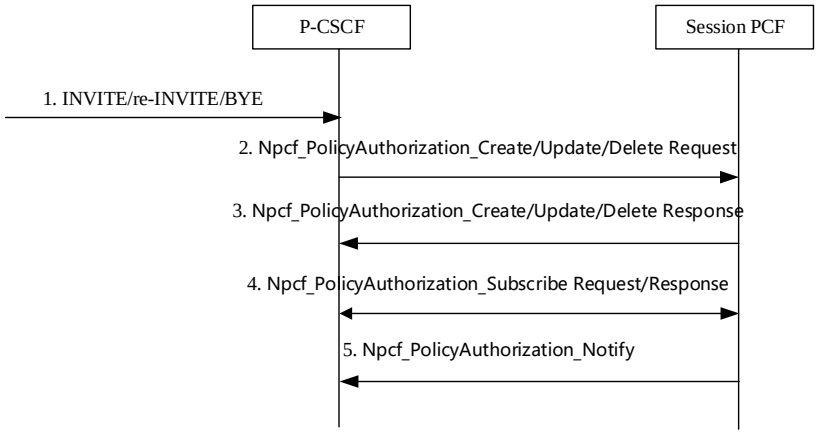

Figure 6.14.1-1: P-CSCF utilize Services provides by Npcf to subscribe to notification of e.g. Access Network information, RAN/NAS/non-3GPP Release cause(s)

1. The P-CSCF receives the SIP INVITE/re-INVITE/BYE message.
2. The P-CSCF invokes the corresponding Npcf_PolicyAuthorization_Create/Update/Delete Request service operations provided by Npcf to retrieve e.g. the Access Network information, the RAN/NAS/non-3gpp Release cause, etc. and optionally to subscribe to notifications on establishment, release of QoS flows and on Access Network information changes.
3. The PCF obtains the UE location information from the SMF and the AMF, as described in the TS 23.502 [4], and sends Npcf_PolicyAuthorization_Create/Update/Delete Response with the UE location information.
4. If not already done in step 2, the P-CSCF subscribes to notifications on establishment, release of QoS flows and on Access Network Information changes.
5. P-CSCF is notified of Access Network Information (e.g. user location and/or user time zone information) at establishment of the QoS Flow. This can be performed via adding Access Network Information to the Npcf_PolicyAuthorization_Notify service operation from PCF to P-CSCF.

   P-CSCF is notified of RAN/NAS/non-3GPP release cause(s) at the release initiated by RAN or by CN. This can be performed via adding RAN/NAS/non-3GPP release cause(s) to the Npcf_PolicyAuthorization_Notify service operation from PCF to P-CSCF.

6.14.2 Impacts on existing nodes and functions

The P-CSCF supports to utilize services provided by Npcf for event subscription.

6.14.3 Solution Evaluation

Editor's note: This clause provides an evaluation of the solution.

6.15 Solution 15: IMS utilize services provided by AMF

6.15.1 Description

This solution addresses Key Issue #8 - How can IMS utilize services provided by 5GC NFs other than PCF.

In IMS network, the P-CSCF needs to be notified of some events related to access network, e.g. UE location information and other access network related events. This information will be used in IMS network for billing, LI, service trigger and so on. In VoLTE network, the P-CSCF subscribes to notification of these events over Rx interface. Since 5GC supports SBI, IMS network is able to use the SBI provided by AMF to subscribe to notification of these events.

Figure 6.15.1-1 illustrates how IMS obtains the AMF address serving the UE during IMS registration procedure.

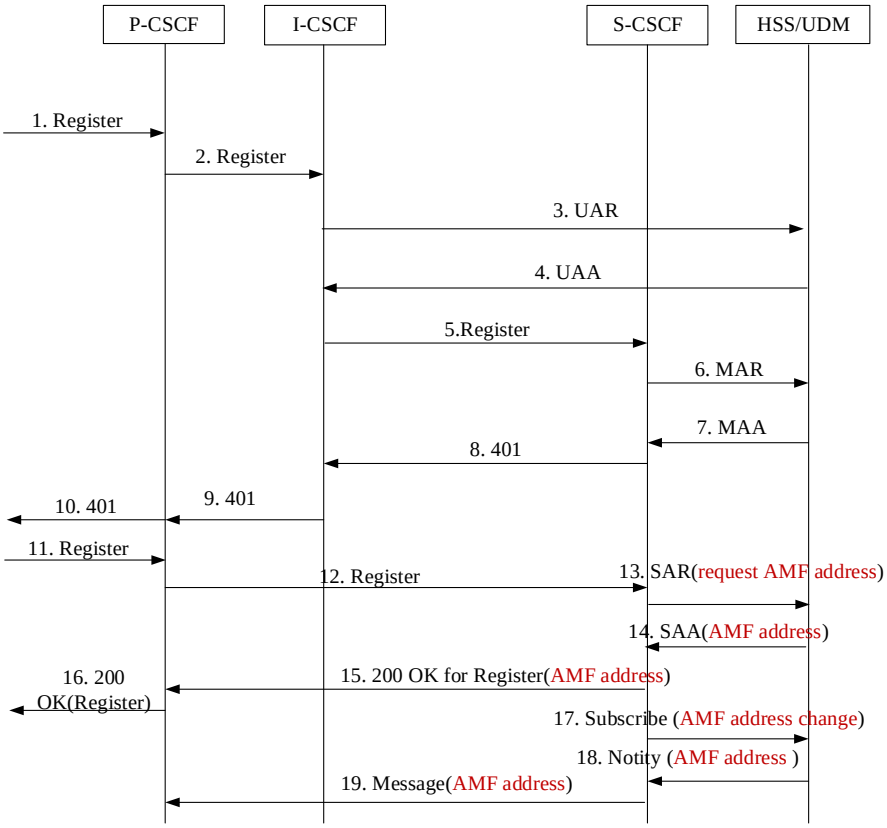

Figure 6.15.1-1: IMS obtains the AMF address during IMS registration procedure

1-12. Normal IMS registration procedure.

13. The S-CSCF requests the AMF address in SAR from the HSS/UDM.

14. The HSS/UDM sends AMF address in the SAA to the S-CSCF.

15. The S-CSCF sends the AMF address to the P-CSCF in the SIP 200 OK.

16. The P-CSCF sends SIP 200 OK to the UE as in normal IMS registration procedure.

17. The S-CSCF subscribes to notification of AMF change to the HSS/UDM.

18. When the AMF changes, the HSS/UDM notifies the S-CSCF.

19. The S-CSCF sends SIP Message with the changed AMF address to the P-CSCF.

Once the IMS (P-CSCF) obtains the AMF address serving the UE, the IMS (P-CSCF) can subscribe to notification of the events supported by AMF e.g. events related to UE location information and access network information.

Figure 6.15.1-2 illustrates the P-CSCF utilizes services provides by AMF to subscribe to notification of the UE location information.

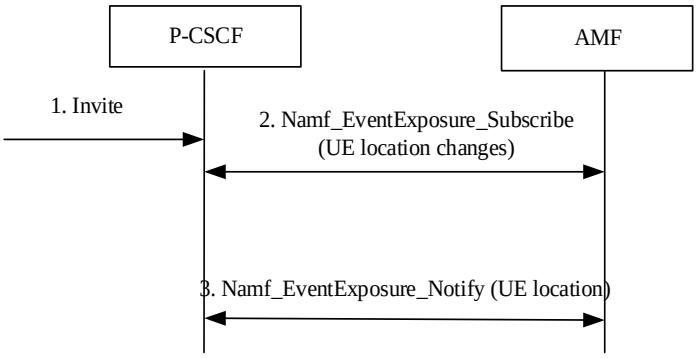

Figure 6.15.1-2: P-CSCF utilizes Services provided by AMF to subscribe to notification of the UE location information

1. The P-CSCF receives the SIP INVITE message.
2. The P-CSCF invokes Namf_EventExposure_Subscribe service operation for event subscription to UE location changes.

NOTE: The Namf_EventExposure service allows one time reporting, i.e. the subscription to notification is only for one time reporting.

3. When the UE location changes, the AMF invokes Namf_EventExposure_Notify to notify the P-CSCF of the UE location.

When the UE moves from the old AMF to the new AMF, the S-CSCF receives notification from the UDM/HSS, and the S-CSCF notifies the P-CSCF of the new AMF address. The P-CSCF invokes Namf_EventExposure_UnSubscribe service operation on the old AMF to unsubscribe the event notification and invokes Namf_EventExposure_Subscribe service operation on the new AMF service as defined in clause 5.2.2 of the TS 23.502 [4].

Editor's note: It is FFS how this solution works in the case there are two AMFs serving a single UE for 3GPP access and non 3GPP access respectively.

6.15.2 Impacts on existing nodes and functions

Editor's note: This clause describes impacts to existing entities and interfaces.

6.15.3 Solution Evaluation

Editor's note: This clause provides an evaluation of the solution.

6.16 Solution 16: Enabling SBI-based Sh Using New Service

6.16.1 Description

This solution addresses key issue 6.

Data managed through the Sh reference point can be categorized as follows:

- IMS subscription related data;
- IMS subscriber context data;
- IMS operational data;
- IMS application server repository and vendor specific data.

Current services supported over Sh for the above data can be classified as follows:

- Reading of data;
- Updating of data;
- Subscription to changes in the data;
- Notification of changes to the data.

Clearly the above operations are not applicable to all the above data parameters.

6.16.1 Sh Data Parameters

The following IMS information elements in HSS managed through the Sh reference point within the above categories, as well as the Sh defined procedures managing them are depicted below:

6.16.1.1 IMS subscription related data

Table 6.16.1.1-1

XML tag	Operations
IMSPublicIdentity	Sh-Pull Sh-Subs-Notif
InitialFilterCriteria	Sh-Pull Sh-Subs-Notif
Charging information	Sh-Pull Sh-Subs-Notif
MSISDN +ExtMSISDN	Sh-Pull
ServiceLevelTraceInfo	Sh-Pull Sh-Subs-Notif
Service Priority Level	Sh-Pull Sh-Subs-Notif
ExtendedPriority	Sh-Pull Sh-Subs-Notif
Reference Location Info	Sh-Pull
IMSI	Sh-Pull
IMSPrivateUserIdentity	Sh-Pull Sh-Subs-Notif

6.16.1.2 IMS subscriber context data

Table 6.16.1.2-1

XML tag	Operations
IMSUserState	Sh-Pull Sh-Subs-Notif
S-CSCFName	Sh-Pull Sh-Subs-Notif
UserState	Sh-Pull
IP Address Secure Binding Information	Sh-Pull Sh-Subs-Notif
SMSRegistrationInfo	Sh-Pull Sh-Update
STN-SR	Sh-Pull Sh-Update
UE-SRVCC- Capability	Sh-Pull Sh-Subs-Notif
IMEISV	Sh-Pull
LocationInformation	Sh-Pull
UE reachability for IP	Sh-Subs-Notif
T-ADS Information	Sh-Pull
CSRN	Sh-Pull

6.16.1.3 IMS operational data

Table 6.16.1.3-1

XML tag	Operations
PSIActivation	Sh-Pull; Sh-Update Sh-Subs-Notif
DSAI	Sh-Pull; Sh-Update Sh-Subs-Notif

6.16.1.4 IMS-AS Repository and vendor specific data

Table 6.16.1.4-1

XML tag	Operations
Repository Data	Sh-Pull; Sh-Update Sh-Subs-Notif

6.16.2 Mapping of Sh Procedure to SBA Services

Given the above categorization of data, the following is proposed:

- IMS AS to access HSS/UDM for IMS related data. This encompasses IMS subscription data, IMS subscriber context data, and IMS operational data.

  In this solution a new SBA service set, Nudm_Sh, is used to interact with the IMS AS in the IMS. Nudm_Sh service operations are suited for each type of Sh Data Parameters.

  - IMS Subscription related data is proposed to be managed using Nudm_Sh_SubscriptionDataManagement service operations.
  - IMS Subscriber context data is proposed to be managed using Nudm_Sh_UserContext service operations.
  - IMS Operational data is proposed to be managed using Nudm_Sh_UserContext service operations.

  The functionality for IMS shall continue to be independent even if it is co-located with UDM/HSS.

  IMS AS to access UDR for AS Repository data + any vendor specific data.

  This solution proposes to use existing Nudr service operations with UDR for managing IMS AS Repository data.

Figure 6.16.2-1 depicts the above:

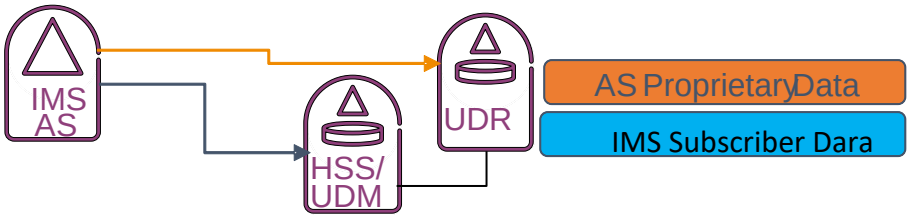

Figure 6.16.2-1

Table 6.16.2-1 illustrates the proposed mapping of current Sh operations to SBA services.

Table 6.16.2-1

Sh Data Segment	Sh Operations/Commands	Nudm_Sh Service Operations in IMS AS context
IMS Subscription Data	Sh-Pull (UDR/UDA) Sh-Subs (SNR/SNA) Sh-Notif (PNR/PNA)	Nudm_Sh_SDM_Get Nudm_Sh_SDM_Subscribe Nudm_Sh_SDM_Unsubscribe Nudm_Sh_SDM_Get Nudm_Sh_SDM_Notification
IMS Subscriber Context Data	Sh-Pull (UDR/UDA) Sh-Subs (SNR/SNA) Sh-Notif (PNR/PNA) Sh-Update (PUR/PUA)	Nudm_Sh_UECM_Get Nudm_Sh_UECM_Subscribe Nudm_Sh_UECM_Unsubscribe Nudm_Sh_UECM_Get Nudm_Sh_UECM_Notification Nudm_Sh_UECM_Update
IMS operational Data	Sh-Pull (UDR/UDA Sh-Subs (SNR/SNA) Sh-Notif (PNR/PNA) Sh-Update (PUR/PUA)	Nudm_Sh_UECM_Get Nudm_Sh_UECM_Subscribe Nudm_Sh_UECM_Unsubscribe Nudm_Sh_UECM_Get Nudm_Sh_UECM_Notification Nudm_Sh_UECM_Update
IMS-AS Repository Data	Sh-Pull (UDR/UDA) Sh-Subs (SNR/SNA) Sh-Notif (PNR/PNA) Sh-Update (PUR/PUA)	Nudr_DR_Query Nudr_DR_Subscribe Nudr_DR_UnSubscribe Nudr_DR_Notify Nudr_DR_Update

Editor's note: The exact service names is FFS.

Figure 6.16.2-2 shows an example:

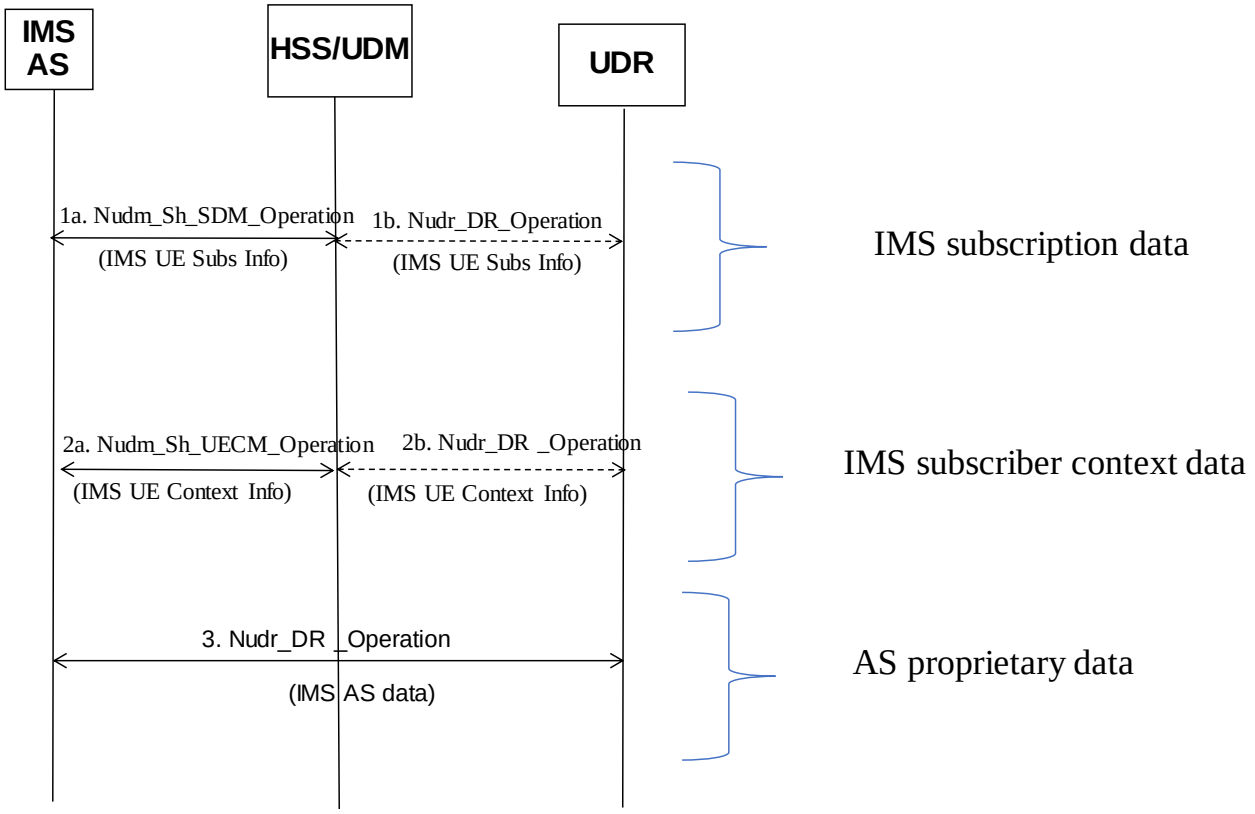

Figure 6.16.2-2

6.16.3 Additional Requirements

Based on the above, the following additional high-level requirements can be identified:

- A new SBA service set, Nudm_Sh, is proposed to be used to interact with the IMS AS in the IMS regarding IMS subscription data, IMS subscriber context data and IMS operation data.
- UDR Data storage and Nudr service operations must support data segmentation and their identification, which can be input to services/operations related to Sh data parameters.

6.16.2 Impacts on existing nodes and functions

Editor's note: This clause describes impacts to existing entities and interfaces.

6.16.3 Solution Evaluation

See clause 7.2.

6.17 Solution 17: Slicing information carried in the IMS registration and for T-ADS

6.17.1 Description

This solution is to resolve the key issue 3: Network slicing and IMS. This solution cover both multiple IMS core and common IMS core scenario.

The UE uses the URSP to determine the IMS service in the particular slice.

The UE establishes the PDU session for IMS in the particular slicing and makes the IMS registration.

Editor's note: Whether the slicing information is S-NSSAI or something else is FFS.

When the P-CSCF receives IMS Registration message, it can get Slicing information from PCC procedure. The P-CSCF checks whether the UE provided Slicing information is same with network provided Slicing information. If not, the P-CSCF replace the UE provided slicing information with network provided Slicing information.

In the 3rd party Registration, the AS gets the UE subscription from HSS/UDM and slicing information from IMS Registration message. It check whether the IMS MMTEL service can be provided in this specific 5GC slice according to UE subscription and/or operator policy.

When the UE has multiple slices simultaneously and establishes the PDU session for IMS DNN for each slice, the UE makes multiple IMS Registration with IMS network. Because each PDU session has unique IP address, the IMS network treat these IMS registration as multiple IMS registration for the same UE.

NOTE: RFC 5626 [92]/5627 [93] has solved multiple registration problem. In the TS 24.229, clause 4.2 "If the UE supports GRUU (see table A.4, item A.4/53) or multiple registrations, then it shall have an Instance ID, in conformance with the mandatory requirements for Instance IDs specified in RFC 5627 [93] and RFC 5626 [92]".

In the 3rd party Registration, the AS gets the UE subscription from HSS/UDM and slicing information from IMS Registration message. When the MT call arrive the AS, the AS can choose the slicing (contact address) for MT delivery according to UE subscription and/or operator policy and IMS service.

6.17.2 Registration Procedure

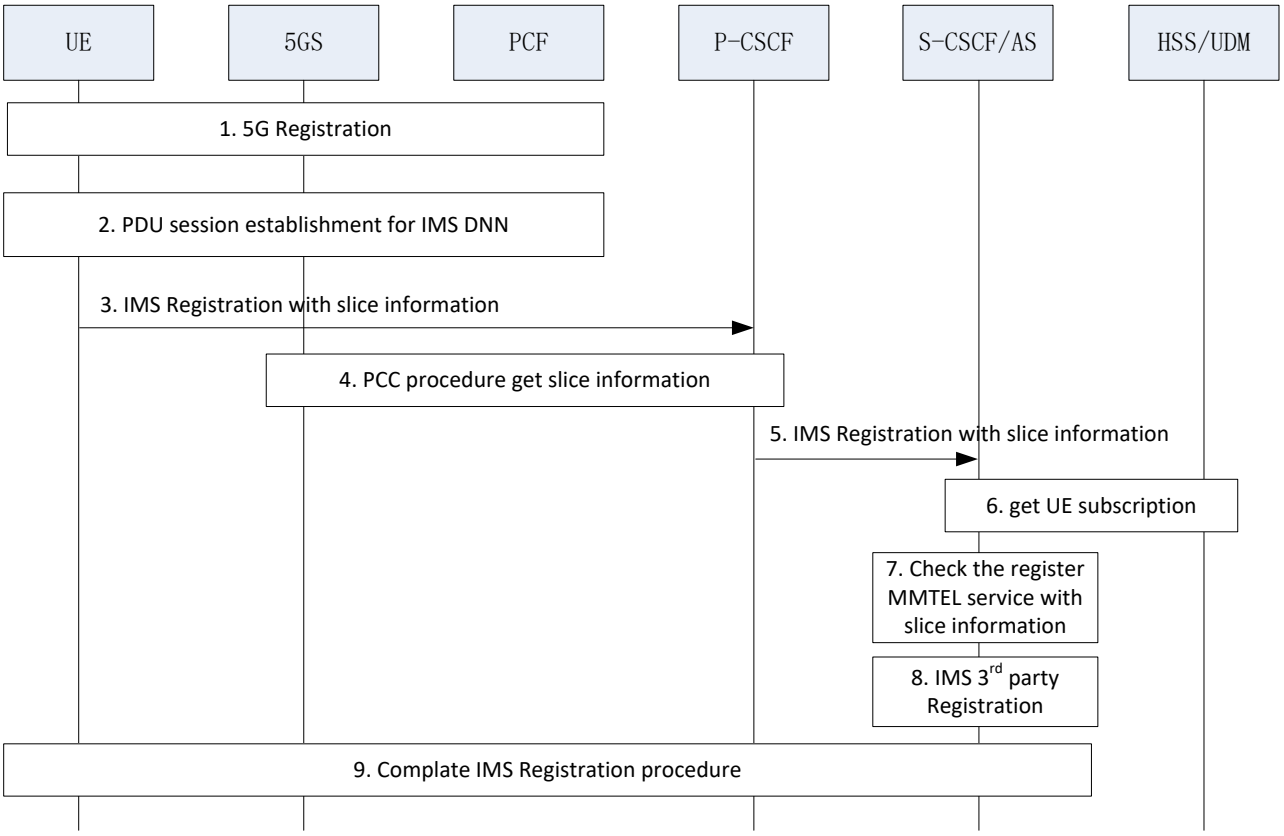

Figure 6.17.2-1: Slicing information carried in the IMS registration

1. The UE makes Registration in the 5GS as per TS 23.502 [4].
2. The UE initiates PDU session establishment for IMS DNN in particular slice as per TS 23.502 [4].
3. The UE sends IMS Registration message to P-CSCF.

Editor's note: Whether the UE sends the information or P-CSCF fetches this information only is FFS.4. P-CSCF gets the slicing information via PCC procedure.

5. The P-CSCF inserts the network provided slice information into Registration message and forward to IMS core.
6. The S-CSCF gets the UE subscription from HSS/UDM.
7. The S-CSCF check whether the register IMS MMTEL service can be provided in this specific 5GC slice according to UE subscription and operator policy.

Editor's note: How the IMS uses the slicing information is FFS.

8. The S-CSCF perform the IMS 3rd party Registration to AS. The AS store the slicing information for this IMS Registration.
9. The IMS registration procedure is completed as per TS 23.228 [2].

Editor's note: When the UE receives the rejection for the service it registers, the UE behaviour regarding URSP is FFS.

6.17.3 MT Procedure

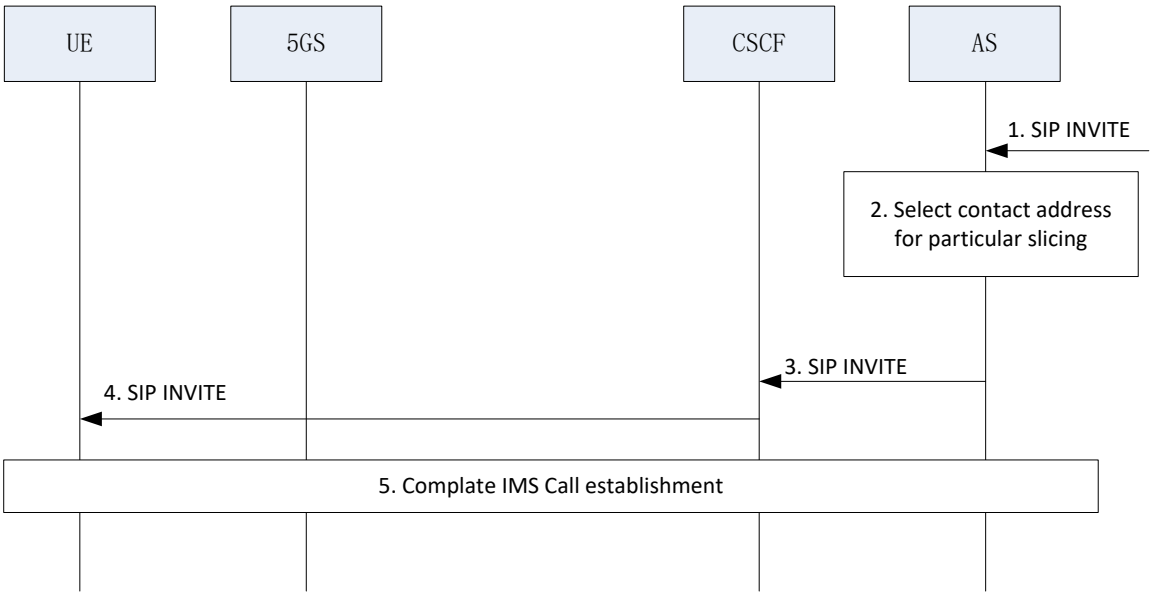

Figure 6.17.3-1: IMS MT call procedure

1. The AS receives the IMS MT call.
2. The AS select the contact address of UE for particular slicing for the service deliver according to Service information, slicing information and operator's policy.
3. The AS sends the SIP INVITE to CSCF.
4. The CSCF sends the SIP INVITE to UE.
5. The IMS Call establishment procedure is completed as per TS 23.228 [2].

6.17.4 Impacts on existing nodes and functions

Editor's note: This clause describes impacts to existing entities and interfaces.

6.17.5 Solution Evaluation

Editor's note: This clause provides an evaluation of the solution.

6.18 Solution 18: NRF based P-CSCF discovery

6.18.1 Description

This solution applies to Key Issue 4: Discovery of Network Functions - explores options for discovery of network functions exposed to IMS e.g. discovery of PCF services, as well as discovery of IMS functions e.g. P-CSCF.

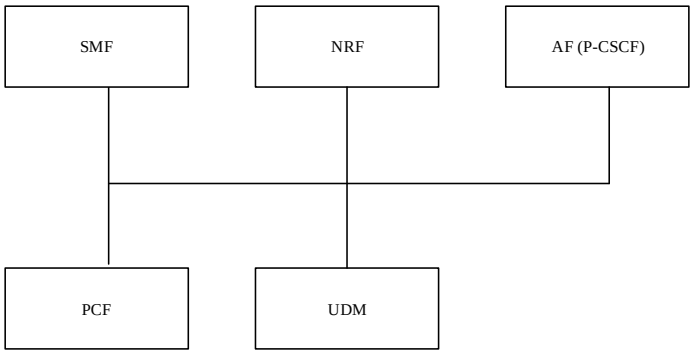

Figure 6.18.1-1: Architecture for P-CSCF Discovery

The P-CSCF invokes the NRF services and operations, i.e. NFRegister, NFUpdate, NFDeregister operations of Nnrf_NFManagement service, as defined in the TS 23.502 [4] clause 5.2.7 to register/update/deregister the P-CSCF address, location information (e.g. Cell-Id, TA), services and/or slice types supported by the P-CSCF, e.g. when the P-CSCF profile changes, P-CSCF uses the NFUpdate operation of Nnrf_NFManagement service to update the profile of P-CSCF stored in NRF.

The SMF invokes the NRF services and operations, i.e. Nnrf_NFDiscovery service and NFStatusSubscribe, NFStatusNotify, NFStatusUnSubscribe operations of Nnrf_NFManagement service to discover and subscribe/unsubscribe and get updated of the P-CSCF address list from NRF, e.g. discover the P-CSCF address list during the IMS PDU session establishment procedure.

6.18.1A P-CSCF selection

P-CSCF selection functionality is used by the SMF to select the P-CSCF for a UE.

The SMF can utilize the Network Repository Function to discover the P-CSCF instance(s) unless P-CSCF information is available by other means, e.g. locally configured on SMF. The NRF provides the IP address or the FQDN of P-CSCF instance(s) to the SMF. The P-CSCF selection function in the SMF selects a P-CSCF instance based on the available P-CSCF instances obtained from NRF or based on the configured P-CSCF information in the SMF.

The following factors may be considered during the P-CSCF selection:

- Selected Data Network Name (DNN).
- Local operator policies.
- Availability of candidate P-CSCFs.
- Load balancing across candidate P-CSCFs (e.g. considering weight factors of candidate P-CSCFs in the P-CSCF Set).

6.18.2 Impacts on existing nodes and functions

The SMF needs to utilize NRF for discovery and selection of P-CSCF address(s).

6.18.3 Solution Evaluation

Editor's note: This clause provides an evaluation of the solution.

6.19 Solution 19: IMS signalling and media of an application through one 5GC slice

6.19.1 Description

This solution addresses network slicing with common IMS network scenario of Key Issue 3: Network Slicing and IMS Key Issue.

As an example for this scenario, one 5GC slice is used for common voice communication application and another 5GC slice is used for public safety communication application.

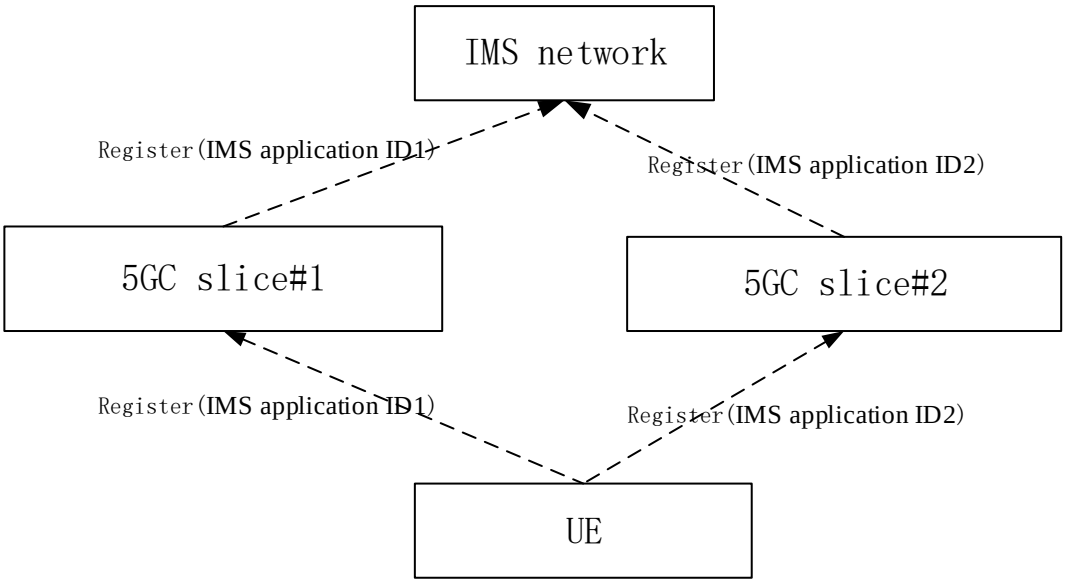

Figure 6.19.1-1

IMS signalling and media of an application go through the same 5GC slice, so each application can map to a single 5GC slice.

In this solution, the UE initiates independent IMS registration through each 5GC slice with the common IMS network.

The procedure is shown in figure 6.19.1-2.

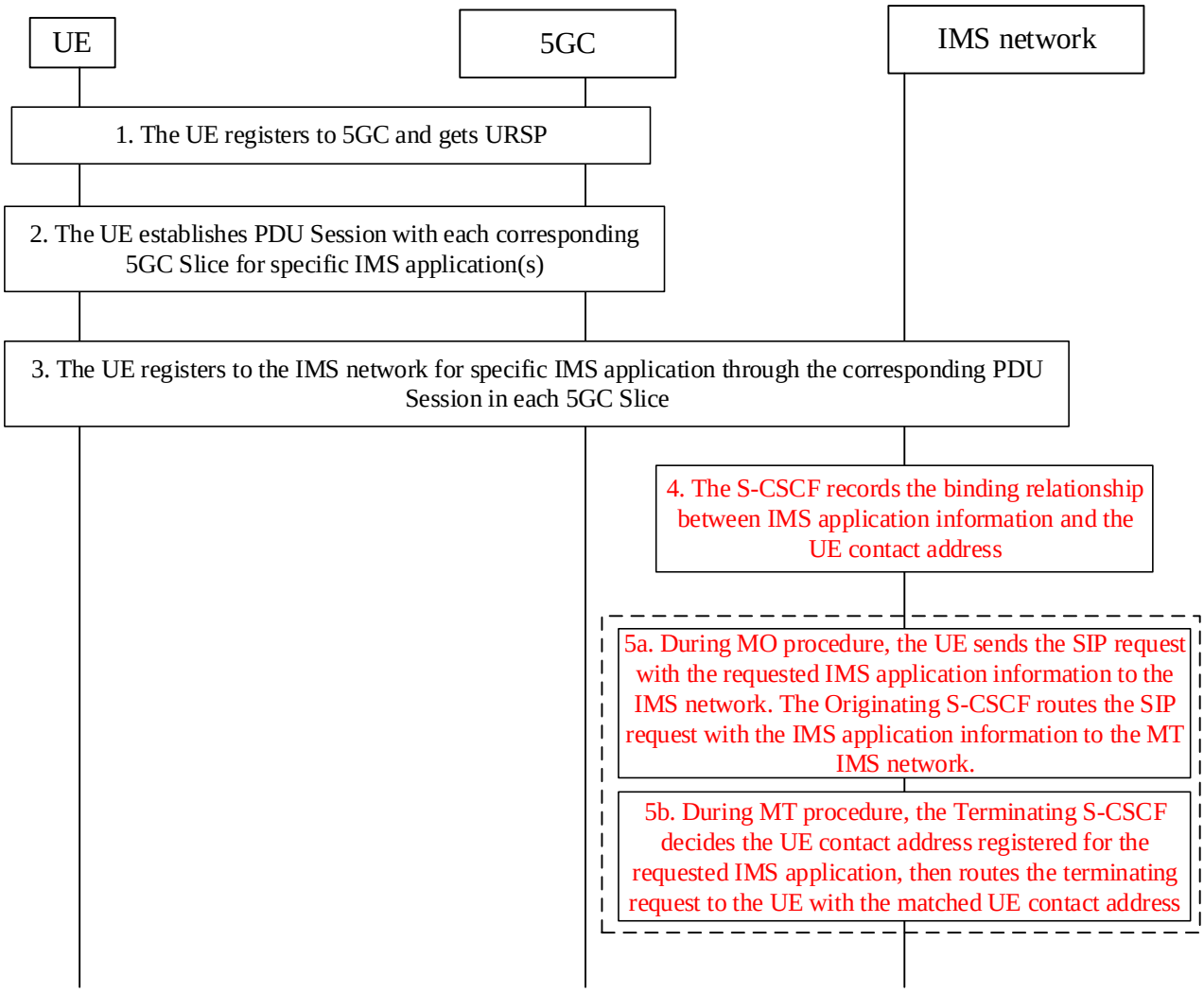

Figure 6.19.1-2: IMS signalling and media of an application through one 5GC slice

1. When the UE registers to 5GC, the UE gets Allowed NSSAI, containing the S-NSSAIs it can use, and URSP.

2. According to URSP and IMS application information the UE requests, the UE establishes the PDU Sessions with each corresponding 5GC Slice for specific IMS application. The UE uses the IMS application information it requests to select the corresponding 5GC Slice. The IMS application information may contain ICSIs or IARIs, as defined in the TS 23.228 [2].

3. For each PDU session established for IMS, the UE initiates registration request to IMS network with the corresponding IMS application information through the corresponding 5GC slice.

Editor's note: It is FFS what is the 5G CN entity that communicates with the IMS network.

4. After successful IMS registration, the S-CSCF records the binding relationship between the IMS application information and the UE contact address.

Editor's note: It is FFS what is the UE contact address.

5a. For MO, the UE sends the SIP request with the requested IMS application information to the IMS network. The Originating S-CSCF routes the SIP request together with the IMS application information to the IMS network of the called party, after routing the SIP request to the appropriate application servers for originating services according to the requested IMS application information.

5b. For MT, the Terminating S-CSCF routes the SIP request to the appropriate application servers for terminating services according to the requested IMS application information.

The Terminating S-CSCF decides the UE contact address registered for the requested IMS application, then routes the SIP request to the UE with the matched UE contact address.

When the SIP request does not contain specific IMS application information, the Terminating S-CSCF selects the appropriate application server based on the contents of the SIP request (such as SDP media capabilities, Content-Type header field, media feature tag), and route the SIP request to the UE with the corresponding UE contact address.

Editor's note: In MT calls, it is FFS how a non-supporting terminating S-CSCF selects the appropriate application server.

Editor's note: In MT calls, it is FFS whether the selection of the application server based on IMS application information and the selection of the application server based on SDP contents would give same results or not.

6.19.2 Impacts on existing nodes and functions

On the S-CSCF:

After successful registration, S-CSCF records the binding relationship between the registered IMS application information and the UE contact address.

The Terminating S-CSCF decides the UE contact address according to the requested IMS application information, then routes the request to the UE with the matched UE contact address.

On the UE:

According to URSP and IMS application information the UE requests, the UE establishes the PDU Sessions with each corresponding 5GC Slice for specific IMS application.

For each PDU session for IMS, the UE initiates registration request to IMS network with the corresponding IMS application information. The UE uses the IMS application information it requests to select the corresponding 5GC Slice. The IMS application information may contain ICSIs or IARIs.

6.19.3 Solution Evaluation

Editor's note: This clause provides an evaluation of the solution.

6.20 Solution 20: Selection of Rx or N5 based on P-GW trunk id.

6.20.1 Description

This is a solution to part of Key issue #7 - specifically the question of *what information is used by P-CSCF and how the P-CSCF derives the information to determine which PCF interface is used for a specific IMS session establishment, when P-CSCF supports N5 and Rx simultaneously"?*

When a P-CSCF can support both Rx and N5 interfaces toward the policy function, it needs to select the appropriate interface/protocol to use. However, such hybrid P-CSCFs are only deployed during the transition to 5G-RAN access, and thus the interworking architecture defined in TS 23.501 [3] is supported, and thus the network will have combined P-GW-C/SMF functionalities.

If the EPC network homogeneously supports the combined P-GW-C/SMF functionality, then the P-CSCF can always use N5 interface toward the combined PCF/PCRF function.

If, however, only some nodes support the combined P-GW-C/SMF functions the EPC will be configured such that any UE indicating support for 5GC will utilize the combined nodes (in case that the UE moves to an area supporting 5G-RAN), and only UE's not supporting 5GC will utilize the non-combined P-GW or P-GW-C. Thus, the P-CSCF is able to use the trunk identity (in some implementations this may be a physical port, VPN, or source MAC address, for example) corresponding to the access network node to determine the appropriate protocol/interface to use; If the identity is associated with trunks to a combined node - use N5; if the identity is associated with a non-combined node - use Rx.

It is a matter of configuration in the P-CSCF whether to use Rx or N5 interface.

6.20.2 Impacts to Existing Nodes and Functions

P-GW:

No impact.

P-GW-C/SMF:

No impact.

P-CSCF:

Select Rx or N5 interface with incoming trunk identifiers.

6.20.3 Evaluation

Editor's note: This clause provides an evaluation of the solution.

6.21 Solution 21: Selection of Nx or N5 based on UE Contact IP address

6.21.1 Description

This is a solution to part of Key issue #7 - specifically the question of *what information is used by P-CSCF and how the P-CSCF derives the information to determine which PCF interface is used for a specific IMS session establishment, when P-CSCF supports N5 and Rx simultaneously"?*

When a P-CSCF can support both Rx and N5 interfaces toward the policy function, it needs to select the appropriate interface/protocol to use. However, such hybrid P-CSCFs are only deployed during the transition to 5G-RAN access, and thus the interworking architecture defined in TS 23.501 [3] is supported, and thus the network will have combined P-GW-C/SMF functionalities.

If the EPC network homogeneously supports the combined P-GW-C/SMF functionality, then the P-CSCF can always use N5 interface toward the combined PCF/PCRF function.

If, however, only some nodes support the combined P-GW-C/SMF functions the EPC will be configured such that any UE indicating support for 5GC will utilize the combined nodes (in case that the UE moves to an area supporting 5G-RAN), and only UE's not supporting 5GC will utilize the non-combined P-GW or P-GW-C. Since the EPC nodes allocate from different IP address pools, the contact IP address of the UE can be used to determine the node and hence whether the node is a combined P-GW-C/SMF, or non-combined P-GW node. Therefore, the P-CSCF is able to use the UE's contact IP address to determine the appropriate protocol/interface to use; If the IP address is associated with a combined node - use N5; if the IP address is associated with a non-combined node - use Rx.

The configuration settings of the SMF/P-GW determine the IP addresses that are allocated to the UEs, and corresponding configuration in the P-CSCF can therefore determine whether the Rx or N5 interface is used.

6.21.2 Impacts to Existing Nodes and Functions

P-GW:

No impact

P-GW-C/SMF:

No impact

P-CSCF:

Select Rx or N5 interface according to UE contact IP address.

6.21.3 Evaluation

Editor's note: This clause provides an evaluation of the solution.

6.22 Solution 22: IMS services for SBA-based Cx interface

6.22.1 Description

This solution addresses Key Issue 5 - exploring mapping of existing Cx procedures to currently defined Nudm services and operations and introducing an SBA-based interface to HSS.

The principle of this solution is to define specific IMS services while reusing the principles of the UDM services specified in Rel-15 (i.e. SDM, UECM, UEAuthentication) where service operations are interface agnostic (e.g. reusable between Sh and Cx) and hence can be used by any IMS NF.

The IMS related service operations are prefixed with "Nhss_ims_XXX" (it is assumed that the IMS data are managed by the HSS part of combo UDM/HSS or by a standalone HSS).

The currently defined 5GC services for SBA-based Cx defined in the TS 29.228 [10] and TS 29.229 [11] can be replaced by new IMS services as summarized in the following table and described in detail below.

Table 6.22.1-1: IMS services over Cx

Diameter Command	Service Operation(s)	Producer	Example consumer(s)
Cx-UAR/UAA	Nhss_ims_UECM_Get	HSS, combo HSS/UDM	I-CSCF
Cx-LIR/LIA	Nhss_ims_UECM_Get	HSS, combo HSS/UDM	I-CSCF
Cx-MAR/MAA	Nhss_ims_UEAuthentication_Get + Nhss_ims_UECM_Update	HSS, combo HSS/UDM	S-CSCF
Cx-SAR/SAA	Nhss_ims_UECM_Registration / Nhss_ims_UECM_Deregistration + Nhss_ims_SDM_Get + Nhss_ims_SDM_Subscribe / Nhss_ims_SDM_Unsubscribe	HSS, combo HSS/UDM	S-CSCF
Cx-RTR/RTA	Nhss_ims_UECM_DeregistrationNotification	HSS, combo HSS/UDM	S-CSCF
Cx-PPR/PPA	Nhss_ims_SDM_Notification	HSS, combo HSS/UDM	S-CSCF

User registration status query (User-Authorization-Request/Answer)

This procedure is invoked by the I-CSCF during registration procedure to authorize registration, to provide a first security check (IMPU/IMPI) and to get the S-CSCF name (if already registered) or the capabilities the S-CSCF has to support. It is replaced by the following service operation:

Nhss_ims_UECM_Get, used by consumer NFs (NEF) to retrieve registration information and to perform a first security check (with Service Logic involvement), with additional parameters:

- Required inputs: IMPI, IMPU, VPLMNID.
- Optional inputs: User_Auth_Type, Flags.
- Optional outputs: S-CSCF name, S-CSCF capabilities.

User Location Query (Location Information Request/Answer)

This procedure is used between the I-CSCF and the HSS to obtain the name of the S-CSCF assigned to a Public Identity, or the name of the AS hosting a PSI for direct routing. The procedure is invoked by the I-CSCF. It is replaced by the following service operation:

Nhss_ims_SDM_Get, allowing an NF consumer to get the NF ID or SMS address of the NF serving the UE (no Service Logic involvement), with additional parameters:

- Required inputs: IMPU.
- Optional inputs: User_Auth_Type, Type of Authorization.
- Optional outputs: S-CSCF name, S-CSCF capabilities, Flags, Wildcarded-IMPU, NSN-Cs-Adaptation.

Authentication (Multimedia-Auth-Request/Answer)

This procedure is used between S-CSCF and HSS to exchange information to support the authentication between the end user and its home IMS network. Invoked by S-CSCF. It is replaced by the following service operation:

Nhss_ims_UEAuthentication_Get, used by the S-CSCF to request the authentication vectors and to inform the HSS about a successful/unsuccessful authentication, with following additional parameters:

- Required inputs: IMPU, Number auth. Items.
- Optional inputs: IMPI, NSN encr. Key index, SIP authenticate.
- Optional outputs: IMPU, IMPI, Number auth. Items, Number auth. Items, Auth. Data, NSN encr. Key index, Proprietary data (Radius related).

S-CSCF registration/deregistration notification (Server-Assignment-Request/Answer)

This procedure is used by the S-CSCF to request the HSS to associate that S-CSCF to the Public Identity (registration), to download relevant user information from the HSS, to backup and retrieve S-CSCF Restoration Information, to provide a P-CSCF Restoration Indication to the HSS

The various use cases (registration, deregistration, user data download) are described separately. Some use cases require two SBI service operations as follows:

Registration: in this case, SAR/SAA is replaced by the following exchanges, exactly like it is done for 5GC registration in TS 23.502 [4] clause 4.2.2.2.2 steps 14a-14c:

i. First, Nhss_ims_UECM_Registration, with following additional parameters:
   - Required inputs: S-CSCF name, Subs Assignt Type, User data already available.
   - Optional inputs: IMPI, IMPU, Restoration data, Wildcarded IMPU, Served IP, Flags.
   - Optional outputs: IMPI, Associated registered IMPIs Wildcarded IMPU.

ii. Second, Nhss_ims_SDM_Get, with following additional parameters:
   - Required inputs: IMPU, IMPI.
   - Optional inputs: Wildcarded IMPU.
   - Optional outputs: User data, Charging Info, Loose Route ind., Restoration data, Wildcarded IMPU, Proprietary data (Radius related).

iii. Third, Nhss_ims_SDM_Subscribe, with following additional parameters:
   - Required inputs: IMPU, IMPI.
   - Optional inputs: none.

Deregistration: in this case, SAR/SAA is replaced by the two following exchanges:

i. First, Nhss_ims_UECM_Deregistration, with following additional parameters:
   - Required inputs: S-CSCF name, Subs Assignt Type.

- Optional inputs: IMPI, IMPU, Wildcarded IMPU, Served IP, Flags.

ii. Second, Nhss_ims_SDM_Unsubscribe, with following additional parameters:

- Required inputs: IMPU, IMPI.
- Optional inputs: none.

Downloading user data from the HSS: in this case, SAR/SAA is replaced by:

Nhss_ims_SDM_Get, with following additional parameters:

- Required inputs: IMPU, IMPI.
- Optional inputs: Wildcarded IMPU.
- Optional outputs: User data, Charging Info, Loose Route ind., Restoration data, Wildcarded IMPU, Proprietary data (Radius related).

Network initiated de-registration by the HSS, administrative (Registration-Termination-Request/Answer)

This procedure is used by the HSS in case of HSS initiated de-registration where the HSS changes the state of the Public Identities to Not Registered and send a notification to the S-CSCF indicating the identities that shall be de-registered. It is replaced by the following service operation:

Nhss_ms_UECM_DeregistrationNotification, with following additional parameters:

- Required inputs: IMPI, deregistration reason.
- Optional inputs: IMPU, Associated IMPIs.
- Optional outputs: Associated IMPIs.

User Profile download (Push-Profile-Request/Answer)

This procedure is initiated by the HSS to update at least one of the following user information in S-CSCF: User profile information, Charging information, etc. It is replaced by the following service operation:

Nhss_ims_SDM_Notification, used to indicate changes to UE's individual subscription data, with following additional parameters

- Required inputs: IMPI.
- Optional inputs: Changed User data, Changed Authentication Data, Changed Charging Info, Changed Proprietary User Data.

6.22.2 Impacts on existing nodes and functions

I-CSCF is impacted as follows:

- implementation of UECM service Nhss_ims_UECM_Get.
- implementation of SDM service Nhss_ims_SDM_Get.

S-CSCF is impacted as follows:

- implementation of Authentication service Nhss_ims_UEAuthentication_Get.
- implementation of UECM services Nhss_ims_UECM_Registration, Nhss_ims_UECM_Deregistration, Nhss_ims_UECM_DeregistrationNotification, Nhss_ims_UECM_Get.
- implementation of SDM service Nhss_ims_SDM_Get, Nhss_ims_SDM_Subscribe, Nhss_ims_SDM_Unsubscribe, Nhss_ims_SDM_Notification.

HSS is impacted as follows:

- implementation of SDM, UECM and Authentication services for IMS.

6.22.3 Solution Evaluation

See clause 7.1.

6.23 Solution 23: IMS services for SBA-based Sh interface

6.23.1 Description

This solution addresses Key Issue 6 - exploring mapping of existing Sh procedures to currently defined Nudm services and operations and introducing an SBA-based interface to HSS.

The principle of this solution is to define specific IMS services while reusing the principles of the UDM services specified in Rel-15 (i.e. SDM, UECM, UEAuthentication) where service operations are interface agnostic (e.g. reusable between Sh and Cx) and hence can be used by any IMS NF.

The IMS related service operations are prefixed with "Nhss_ims_XXX" (it is assumed that the IMS data are managed by the HSS part of combo UDM/HSS or by a standalone HSS).

The currently defined 5GC services for SBA-based Sh defined in TS 29.328 [14] and TS 29.329 [9] can be replaced by new IMS services as summarized in the following table and described in detail below.

Table 6.23.1-1: IMS services over Sh

Diameter Command	Service Operation(s)	Producer	Example Consumer(s)
UDR/UDA	Nhss_ims_SDM_Get	HSS, combo HSS/UDM	AS
SNR/SNA (subscription)	Nhss_ims_SDM_Subscribe + Nhss_ims_SDM_Get	HSS, combo HSS/UDM	AS
SNR/SNA (unsubscription)	Nhss_ims_SDM_Unsubscribe	HSS, combo HSS/UDM	AS
PNR/PNA	Nhss_ims_SDM_Notification	HSS, combo HSS/UDM	AS
PUR/PUA	Nhss_ims_SDM_Update	HSS, combo HSS/UDM	AS

Data read (Sh-Pull)

This procedure is mapped to User-Data-Request/Answer in Diameter (according to clause 6.1.1 of TS 29.328 [14]), is invoked by the AS and is used to read transparent and/or non-transparent data for a specified user from the HSS. It is replaced by the following service operations:

Nhss_ims_SDM_Get with following parameters:

- Required Inputs: User ID, Data reference.
- Optional Inputs: Wildcarded-PSI, Wildcarded -IMPU, Data ref. related indicators.
- Required Outputs: Result code.
- Optional Outputs: User data, Wildcarded-PSI, Wildcarded -IMPU.

As an alternative, transparent data can be handled by using a Nudr_DR_Query service operation with extensions required for IMS AS (e.g. MMTel).

Data Update (Sh-Update)

This procedure is mapped to Profile-Update-Request/Answer in Diameter (clause 6.1.2 of TS 29.328 [14]), invoked by the AS and it is used to allow the AS to update the transparent (repository) data stored at the HSS for each IMS Public User Identity (for Public User Identities matching a Wildcarded Public User Identity, the transparent data shall be stored per Wildcarded Public User Identity, and not for each specific Public User Identity matching that Wildcarded Public User Identity) or Public Service Identity (for Public Service Identities matching a Wildcarded PSI, the transparent data shall be stored per Wildcarded PSI, and not for each specific Public Service Identity matching that Wildcarded PSI).

It is replaced by the following service operation:

Nhss_ims_SDM_Update with following parameters:

- Inputs Required: NF Type, User ID, Data reference, User data.
- Inputs Optional: Wildcarded-PSI, Wildcarded -IMPU, IMPI.
- Outputs Required: Result code.
- Outputs Optional: Wildcarded-PSI, Wildcarded -IMPU, Repository data, Data reference.

As an alternative, transparent data can be handled by using a Nudr_DR_Update service operation with extensions required for IMS AS (e.g. MMTel).

Subscription to notifications (Sh-Subs-Notif)

This procedure is mapped to Subscribe-Notifications-Request/Answer in Diameter (clause 6.1.3 of TS 29.328 [14]), is invoked by the AS and is used to subscribe to Notifications for when transparent and/or non-transparent data for a specified IMS Public User Identity or Public Service Identity is updated by the HSS. It is also optionally used to request the user data from the HSS in the same Sh diameter operation according to TS 29.328 [14].

For subscribing to notifications, it is replaced by two service operations (one for subscription, one for fetching subscriber data):

Nhss_ims_SDM_Subscribe with following parameters:

- Required Inputs: NF Type, User ID, Data reference, Subs. Req. type.
- Optional Inputs: Expiry time, Wildcarded-PSI, Wildcarded-IMPU, Data ref. related indicators. IMPI.
- Required Outputs: Result code.
- Optional Outputs: User data, Wildcarded-PSI, Wildcarded-IMPU.

Nhss_ims_SDM_Get (if data are requested by AS) with following parameters:

- Required Inputs: NF Type, User ID, Data reference.
- Optional Inputs: IMPI.
- Required Outputs: Result code.
- Optional Outputs: User data.

As an alternative, transparent data can be handled by using a Nudr_DR_Subscribe service operation with extensions required for IMS AS (e.g. MMTel).

For the unsubscribing to notifications, it is replaced by a single service operation:

Nhss_ims_SDM_Unsubscribe with following parameters:

- Required Inputs: NF Type, User ID, Data reference, Subs. Req. type.
- Optional Inputs: Expiry time, Wildcarded-PSI, Wildcarded-IMPU, Data ref. related indicators. IMPI.
- Required Outputs: Result code.
- Optional Outputs: Wildcarded-PSI, Wildcarded-IMPU.

As an alternative, transparent data can be handled by using a Nudr_DR_Unsubscribe service operation with extensions required for IMS AS (e.g. MMTel).

Notifications (Sh-Notif)

This procedure is mapped to Push-Notification-Request/Answer in Diameter (clause 6.1.4 of TS 29.328 [14]), invoked by the HSS and is used to inform the AS of changes in transparent and/or non-transparent data to which the AS has previously subscribed to receive Notifications for, using Sh-Subs-Notif. It is replaced by the following service operations:

Nhss_ims_SDM_Notification with following parameters:

- Required Inputs: User Id, User data.
- Optional Inputs: Wildcarded-PSI, Wildcarded -IMPU, IMPI.
- Required Outputs: Result code.
- Optional Outputs: none.

As an alternative, transparent data can be handled by using a Nudr_DR_Notify service operation with extensions required for IMS AS (e.g. MMTel).

6.23.2 Impacts on existing nodes and functions

AS is impacted as follows:

- implementation of SDM service operations Nhss_ims_SDM_Get, Nhss_ims_SDM_Subscribe, Nhss_ims_SDM_Unsubscribe, Nhss_ims_SDM_Notification and of the new Nhss_ims_SDM_Update.

HSS or combo HSS/UDM is impacted as follows:

- addition of SDM service operations for IMS.

6.23.3 Solution Evaluation

See clause 7.2.

6.24 Solution 24: PCF discovery and selection for IMS

6.24.1 Description

This solution applies to Key Issue 4: Discovery of Network Functions - explores options for discovery of network functions exposed to IMS.

IMS Utilizes BSF services and operations for PCF discovery and selection, as defined in TS 23.501 [3] clause 6.3.7 and TS 23.502 [4] clause 5.2.13.2.4.

6.24.2 Impacts on existing nodes and functions

None.

6.24.3 Solution Evaluation

Editor's note: This clause provides an evaluation of the solution.

6.25 Solution 25: Selection of Nx or N5 based on two different P-CSCF FQDN/IP@

6.25.1 Description

This is a solution to part of Key issue #7 - specifically the question of what information is used by P-CSCF and how the P-CSCF derives the information to determine which PCF interface is used for a specific IMS session establishment, when P-CSCF supports N5 and Rx simultaneously".

The solution is as follows.

- The P-CSCF has two different FQDNs which map to two different IP@, FQDN-1 ~ IP@1 and FQDN-2 ~ IP@2.
- FQDN-1/IP@1 is used for IMS registrations when UE is anchored on PGW. The P-CSCF uses Rx to interface with PCRF for this case.
- FQDN-2/IP@2 is used for IMS registrations when UE is anchored on SMF+UPF. The P-CSCF uses N5 with PCF for this case.

The SMF+PGW-C learns if selected PCF for a UE's IMS PDU session supports Rx or N5 interface via the NRF. If the PCF exposes Rx, the SMF+PGW-C acts like a PGW with regards this solution. Otherwise, the SMF+PGW-C behaves likes a SMF.

When the UE creates PDN connection anchored at the PGW, the FQDN-1/IP@1 of the P-CSCF is provided to the UE either as part of attach accept or as part of DHCP configuration. When the UE creates PDN connection which is anchored at SMF+UPF, FQDN-2/IP@2 is provided to the UE.

From TS 24.229, clause 9.2.1, these are the different ways in which UE can obtain P-CSCF address (and in italics how this solution applies):

The methods for acquiring a P-CSCF address(es) are:

I. Employ Dynamic Host Configuration Protocol for IPv4 RFC 2131 or for IPv6 (DHCPv6) RFC 3315. Employ the DHCP options for SIP servers RFC 3319 or, for IPv6, RFC 3361. Employ the DHCP options for Domain Name Servers (DNS) RFC 3646.

The UE shall either:

- in the DHCP query, request a list of SIP server domain names of P-CSCF(s) and the list of Domain Name Servers (DNS); or
- request a list of SIP server IP addresses of P-CSCF(s).

SOLUTION: The DHCP relay (proxy) in the PGW uses a DHCP server to obtain and provide FQDN-1/IP@1 (and multiple addresses) and provides this to the UE. Similarly the DHCP relay (proxy) in the SMF uses a different DHCP server or different configuration in the DHCP Server, to obtain and provide FQDN21/IP@2 (and multiple addresses) and provides this to the UE.

Limitation for this scenario is that when the UE reboots and the type of anchor for the UE changes (e.g. PGW to SMF) and the lifetime of the FQDN of PCSCF may still point to the wrong interface (e.g. FQDN-1) of P-CSCF. This solution would still work if the selection of PGW or SMF+PGW-C by the MME does not change between UE reboots, e.g. UE's subscription or UE network capability information used for PGW or SMF+PGW-C selection does not change, or service area of PGW or SMF is PLMN wide.

II. Obtain the P-CSCF address(es) by employing a procedure that the IP-CAN technology supports. (e.g. GPRS).

SOLUTION: The PGW is configured to provide IP@/FQDN1 and SMF is configured to provide IP@/FQDN-2 in PCO.

III. The UE may use pre-configured P-CSCF address(es) (IP address or domain name). For example:

a. The UE selects a P-CSCF from the list stored in ISIM or IMC;

b. The UE selects a P-CSCF from the list in IMS management object.

NOTE 1: Access-specific annexes provide additional guidance on the method to be used by the UE to acquire P-CSCF address(es).

SOLUTION: The solution may not work for this option, but this pre-configuration of IP@ in UE is not a common deployment option. To make the solution work for this option, may require the overwriting of the pre-configuration in the UE with the IP@/FQDN provided in PCO.

When acquiring a P-CSCF address(es), the UE can freely select either method I or II or III.

NOTE 2: If a P-CSCF address is provisioned or received as a FQDN, procedures according to RFC 3263 will provide the resolution of the FQDN.

The UE may also request a DNS Server IP address(es) as specified in RFC 3315 and RFC 3646 or RFC 2131.

6.25.2 Impacts to Existing Nodes and Functions

P-GW

- Configured to provide FQDN-1/IP@1 of the P-CSCF at PDN connection setup. Also if DHCP is being used, the DHCP-proxy at PGW only provides FQDN-1 (and not FQDN-2) of the P-CSCF.

SMF+PGW-C

- Configured to provide FQDN-2/IP@2 of the P-CSCF at PDU session setup. Also if DHCP is being used, the DHCP-proxy at PGW only provides FQDN-2 (and not FQDN-1) of the P-CSCF.

P-CSCF

- Needs to support two different IP@s for IMS registration of UEs, one for UEs whose IMS PDN connections are anchored at PGW and the other for UEs whose IMS PDU sessions are anchored at the SMF+UPD.

6.25.3 Evaluation

This configuration approach works for the case when P-CSCF FQDN/ IP@ is provided in PCO.

For the approach where PCSCF FQDN/IP@ is provided using DHCP/DNS, the solution works under the limitation that the type of anchor (PGW or SMF) does not change between UE reboots.

The solution does not solve the case when PCSCF FQDN/IP@ is pre-configured in the UE.

This solution is based on configuration only and does not require updates to specifications.

6.26 Solution 26: Use of NRF for User identity to HSS resolution

6.26.1 Description

In deployments with both legacy HSS accessible via Diameter and HSS (combined or not with UDM) upgraded with SBI, the I-CSCF, S-CSCF and IMS AS need to know the type of interface it shall use to access the HSS: SBI or Diameter.

In existing networks, the I-CSCF (at IMS registration and UE Invite), the S-CSCF (at IMS registration) and IMS AS determine the HSS to contact by using either a Subscription Locator Function (SLF) or a Diameter Proxy Agent (DRA) that proxies the request to the HSS as defined as TS 23.228 [2] clause 5.8.

If SLF is used, a solution would be to configure it for each HSS name with an indication of SBI support: when an IMS entity (I-CSCF, S-CSCF, AS) queries the SLF, the SLF would return the HSS name with a the "SBI support" indication. But this solution does not work when a DRA is used because the use of DRA implies using Diameter.

Another solution would be to use NRF services extended with additional parameters for IMS as follows:

- The SBI capable HSS registers to the NRF using the Nnrf_NFManagement_NFRegister Request message with following additional input parameters: range of IMPIs, list of IMPUs.
- The SBI capable IMS entity (e.g. I-CSCF), when it needs to know the HSS name, sends a Nnrf_NFDiscovery_Request with following additional input parameters: IMPI (for an IMS registration), IMPU (for an UE Invite).
- If the IMPI is in the IMPI range or the IMPU is in the list of IMPUs stored by the SBI capable HSS, the NRF answers with Nnrf_NFDiscovery_Request Response message containing the HSS name in which the user's subscription data can be found. Otherwise, the Nnrf_NFDiscovery_Request Response message does not contain any HSS name.
- If the IMS entity (e.g. I-CSCF) does not contain the HSS name, the IMS entity shall attempt to discover the HSS by using the SLF or the DRA as if there were only legacy Diameter-only based HSS.

This solution allows to eliminate the Dx and Dh Diameter interfaces from the IMS (Dx interface being the standard interface between CSCF and SLF, and Dh interface being the standard interface between AS and SLF).

NOTE: Scalability issue (due to IMPI/IMPU ranges inputs) needs to be investigated during normative phase.

6.26.2 Extended NRF Service operations

NRF service operations defined in TS 23.502 [4] are extended as follows:

Table 6.26.1-1: NF services provided by the NRF

Service Name	Service Operations	Operation Semantics	Example 5GC Consumer(s)	Additional IMS consumers
Nnrf_NFManagement	NFRegister	Request/Response	AMF, SMF, UDM, AUSF, NEF, PCF, SMSF, NSSF, UPF, BSF, CHF	HSS
	NFUpdate	Request/Response	AMF, SMF, UDM, AUSF, NEF, PCF, SMSF, NSSF, UPF, BSF, CHF	HSS
	NFDeregister	Request/Response	AMF, SMF, UDM, AUSF, NEF, PCF, SMSF, NSSF, UPF, BSF, CHF	HSS
	NFStatusSubscribe	Subscribe/Notify	AMF, SMF, PCF, NEF, NSSF, SMSF, AUSF, CHF	
	NFStatusNotify		AMF, SMF, PCF, NEF, NSSF, SMSF, AUSF, CHF	
	NFStatusUnSubscribe		AMF, SMF, PCF, NEF, NSSF, SMSF, AUSF, CHF	
Nnrf_NFDiscovery	Request	Request/Response	AMF, SMF, PCF, NEF, NSSF, SMSF, AUSF, CHF	I-CSCF, S-CSCF, AS
Nnrf_AccessToken	Get	Request/Response	AMF, SMF, PCF, NEF, NSSF, SMSF, AUSF, UDM	I-CSCF, S-CSCF, AS, HSS

Nnrf_NFManagement_NFRegister service operation is used by the HSS with following parameters:

- Required Inputs: NF Type (HSS).
- Optional Inputs: IMPI range, list of IMPUs.
- Required Outputs: Result indication.
- Optional Outputs: None.

Nnrf_NFManagement_NFUpdate service operation is used by the HSS with following parameters:

- Required Inputs: NF Type (HSS).
- Optional Inputs: Same as Nnrf_NFManagement_NFRegister service operation.
- Required Outputs: Result indication.
- Optional Outputs: None.

Nnrf_NFManagement_NFDeregister service operation is used by the HSS with following parameters:

- Required Inputs: NF Type (HSS), NF Instance ID, Reason indication.
- Optional Inputs: None.
- Required Outputs: Result indication.
- Optional Outputs: None.

Nnrf_NFDiscovery_Request service operation is used by I-CSCF, S-CSCF, AS with following parameters:

- Required Inputs: NF Type.

- Optional Inputs: IMPI (for an IMS Register if NF Type = I-CSCF), IMPU (for an UE Invite if NF Type = I-CSCF or if NF Type is S-CSCF or AS).
- Required Outputs: HSS Name.
- Optional Outputs: None.

6.26.3 Call flows (based on call flows of TS 23.228 [2] clause 5.8)

6.26.3.1 User identity to HSS resolution on IMS Register

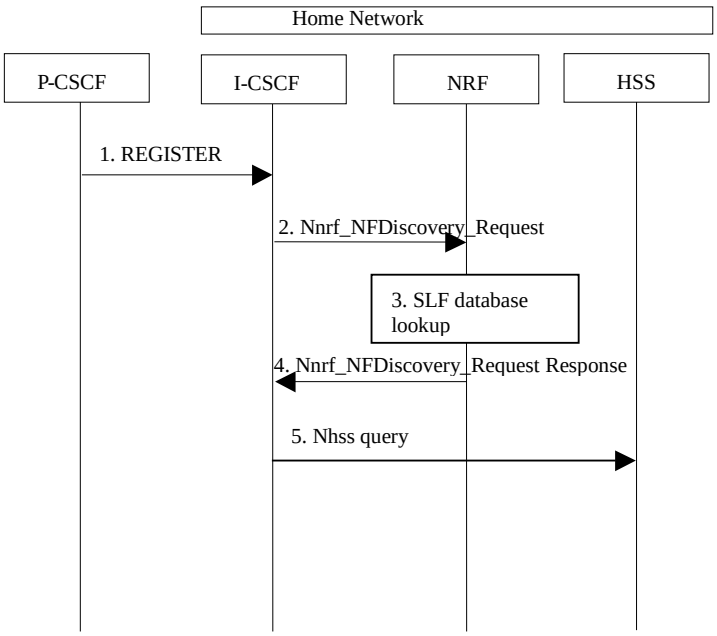

Figure 6.26.3.1-1: HSS resolution on register (1st case)

1. Same as TS 23.228 [2] figure 5.20 step 1.
2. The I-CSCF sends a Nnrf_NFDiscovery_Request message to the NRF and includes as parameter the user identity which is stated in the REGISTER request.
3. Same as TS 23.228 [2] figure 5.20 step 3.
4. The NRF answers with a Nnrf_NFDiscovery_Request message containing the HSS name in which the user's subscription data can be found.
5. The I-CSCF can proceed by querying the appropriate HSS via service-based interface.

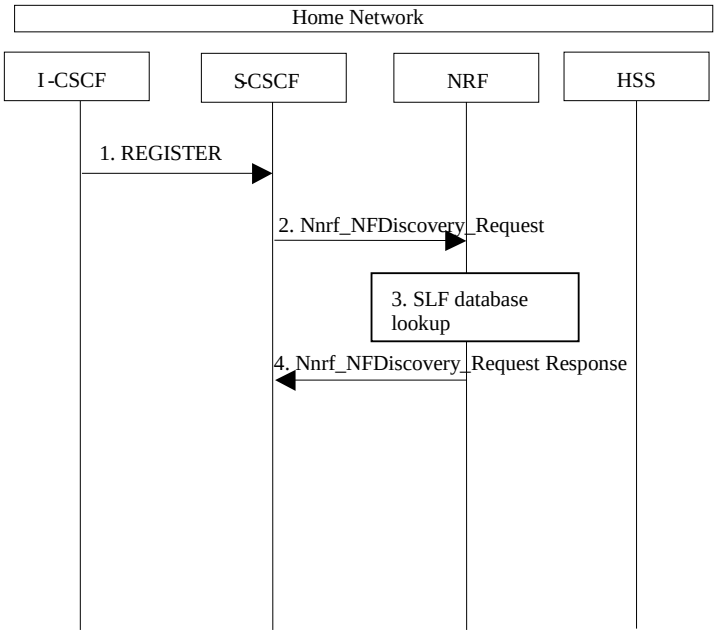

Figure 6.26.3.1-2: HSS resolution on register (2nd case)

1. Same as TS 23.228 [2] figure 5.20a step 1.
2. The S-CSCF sends a Nnrf_NFDiscovery_Request message to the NRF and includes as parameter the user identity which is stated in the REGISTER request.
3. Same as TS 23.228 [2] figure 5.20a step 3.
4. The NRF answers with a Nnrf_NFDiscovery_Request message containing the HSS name in which the user's subscription data can be found.

6.26.3.2 User identity to HSS resolution on UE Invite

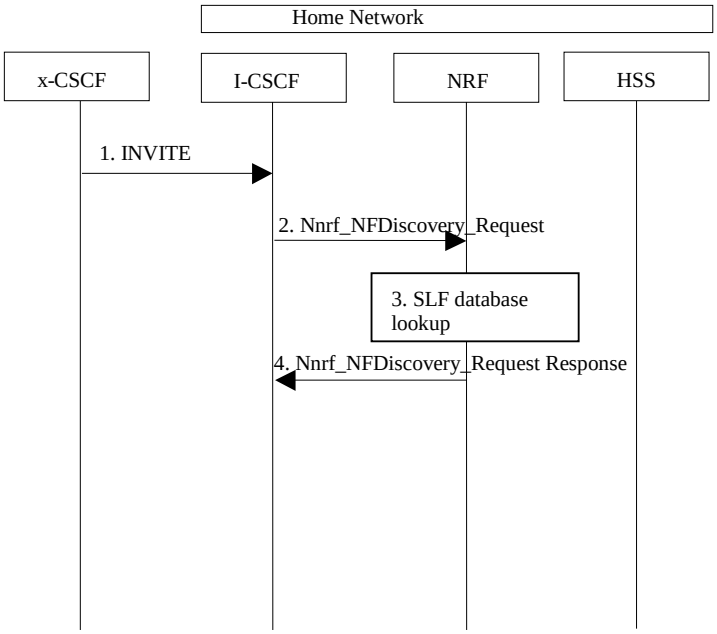

Figure 6.26.3.2-1: HSS resolution on UE invite

1. Same as TS 23.228 [2] figure 5.21 step 1.

2. Same as TS 23.228 [2] figure 5.21 step 2 except that the I-CSCF sends a Nnrf_NFDiscovery_Request message to the NRF and includes as parameter the user identity which is stated in the INVITE request.

3. Same as TS 23.228 [2] figure 5.21 step 3.

4. The NRF answers with a Nnrf_NFDiscovery_Request Response message containing the HSS name in which the user's subscription data can be found.

6.26.3.3 User identity to HSS resolution on AS access

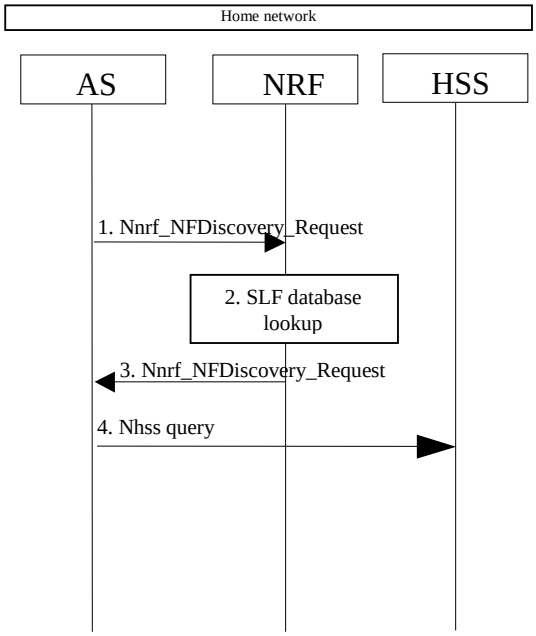

Figure 6.26.3.3-1: HSS resolution on AS access

1. An AS sends a Nnrf_NFDiscovery_Request message to the NRF and includes as a parameter the Public User Identity.

2. Same as TS 23.228 [2] figure 5.21a step 2.

3. The NRF answers with a Nnrf_NFDiscovery_Request Response message containing the HSS name in which the user's subscription data can be found.

4. The AS sends the appropriate Nhss service-based message towards the correct HSS.

7 Overall Evaluation

7.1 Evaluation of solutions addressing key issue #5

Solution 12:

This solution has the merit to separate IMS services from non-IMS services. Indeed, IMS service logic and repository may exist even without any mobile core as it is independent from the type of access (4G, 5G, non-3GPP Core) and eIMS5G study does not include the move of service logic from HSS.

Solution #12 states that the reuse of UDM services is not optimized: "the lack of optimization relates to the increased number of transactions that would be required for IMS procedures using Rel-15 UDM services". Hence, the proposed services are designed to work solely over Cx interface (they are denoted "Ncx"). This approach is point-to-point based. This is not in line with service-based architecture, which is designed to provide services for multiple NFs (UDM services are already used by multiple services such as AMF, SMF, SMSF, GMLC, NEF).

Moreover, the higher number of transactions is inherent to service-based architecture and is not an argument in favour of a point-to-point solution. A very good example is the 5GC Registration specified in TS 23.502 [4] clause 4.2.2.2.2 steps 14a to 14c, in which AMF uses three UDM procedures:

- the new AMF registers with the UDM using Nudm_UECM_Registration.
- then the AMF retrieves the Access and Mobility Subscription data, SMF Selection Subscription data and UE context in SMF data using Nudm_SDM_Get.
- then the AMF subscribes to be notified using Nudm_SDM_Subscribe when the data requested is modified.

Solution 13:

The reuse of UDM services as proposed in solution 13 looks natural when both non-IMS and IMS data are handled by the UDM. However, as stated above, it is needed to separate services for IMS from services for non-IMS. It is also noted that an IMS profile is independent from the type of access (4G, 5G, non-3GPP).

Furthermore, it is proposed in solution #13 to map RTR/RTA (registration termination) to Subscriber Data Management services. However, in network initiated de-registration by the HSS (RTR/RTA), the HSS changes the state of the Public Identities to Not Registered and sends a notification to the S-CSCF indicating the identities that shall be de-registered. It involves the Service Logic and the Nudm_UECM_Get procedure should be used instead.

Similarly, it is also proposed to map UAR/UAA to Subscriber Data Management services. From TS 29.228, it is stated that User Registration Status Query procedure (UAR/UAA) is invoked by the I-CSCF during registration procedure to authorize registration, to provide a first security check (IMPU/IMPI) and to get the S-CSCF name (if already registered) or the capabilities the S-CSCF has to support. It involves the Service Logic and the Nudm_UECM_Get procedure should be used instead.

Moreover, the mapping between SAR/SAA and Cx operations is not detailed enough. Indeed, in table 6.13.1-1, does not show which UDM services are used for a particular use case (registration, deregistration, user data download). For example, it does not explain that SAR/SAA for registration is replaced by the three service operations Nudm_UECM_Registration, Nudm_SDM_Get and Nudm_SDM_Subscribe exactly like it is specified for 5GC Registration specified in TS 23.502 [4] clause 4.2.2.2.2 steps 14a to 14c.

Solution #13 does not either show which parameters are added to the UDM services.

Solution 22:

In that solution, it is proposed to define IMS specific service operations, based on both solution 13 (based on UDM services principles: SDM, UECM, UEAuthentication) and solution 12 (separating IMS services from non-IMS services), where service operations can be used by any NF i.e. interface agnostic (reused between Sh and Cx) hence satisfying service-based approach.

It also corrects the mapping with regards to SDM vs UECM.

7.2 Evaluation of solutions addressing key issue #6

In this TR, there are three solutions addressing Key Issue 6 (Enabling SBA-based Sh). The evaluation of these solutions is studied below.

- Solution 10: Reuse of UDM services and operations for SBA-based Sh interface.
- Solution 16: Enabling SBI-based Sh Using New Service.
- Solution X: IMS services for SBA-based Sh interface.

Solution 16:

This solution has the merit to separate IMS services from non-IMS services. Indeed, IMS service logic and repository may exist even without any mobile core as it is independent from the type of access (4G, 5G, non-3GPP Core) and eIMS5G study does not include the move of service logic from HSS.

But the main drawback of solution 16 is that it proposes services specific to an interface: one set of services for Sh, and a separate set of services for Cx. This is a point-to-point approach, rather than a service-based approach in which a set of services is assumed to be available for any NF over any interface.

Solution 10:

This solution has the merit to reuse UDM services principles (SDM, UECM). But, as stated above, where the IMS data may be handled by a separate HSS FE with associated EPC/IMS UDR, it is needed to separate services for IMS from services for non-IMS.

Solution 23:

In that solution, it is proposed to define IMS specific service operations, based on both solution 10 (based on UDM services principles: SDM, UECM) and solution 16 (separating IMS services from non-IMS services), where service operations can be used by any NF i.e. interface agnostic (reused between Sh and Cx) hence satisfying service-based approach.

8 Conclusions

8.1 Conclusions Related to Key Issue #4

With regard to discovery of network functions it is concluded:

- SMF can utilize the services of the NRF to discover/select the P-CSCF - solution 18 is used as the basis for normative work.
- Solution 24 is used as the basis for normative work to address discovery/selection of PCF by IMS-CSCF.
- HSS discovery/selection will be resolved during normative phase.

8.2 Conclusions for Key Issue #5 and Key Issue #6

For Key Issue #5 and Key Issue #6 the following is concluded:

- The IMS service logic is performed by the IMS-HSS. Whether the IMS Service Logic is deployed as a combined UDM/HSS is an implementation option.
    - New SBA services are defined for IMS services exposed by the IMS service logic, with CSCF and IMS-AS as consumers.
    - For interactions with the CSCF Solution 22 is the basis for normative work, Stage 3 will need to investigate if whether implicit subscription from solution 12 or explicit subscription (solution 22) are required.
- For interactions with the IMS-AS Solution 23 will be used as the basis for normative work. Stage 3 will investigate the data split in solution 16 into operational and subscription data, if deemed necessary.
- These new SBA services will support transport of IMS AS transparent data (as the Sh interface does in diameter-based solutions) - to avoid unnecessary impacts to existing IMS ASs. Stage 3 will need to investigate if for transparent data the IMS-AS can use existing services, or enhancements to existing services to store this type of data in the UDR.

8.3 Conclusions Related to Key Issue #7

Regarding key issue of "How can IMS utilize services provided by Npcf" the following is concluded:

- IMS can utilize the services of the PCF as a AF using existing Npcf services.
- Solution #9 and #14 are adopted as the basis for enhancing Npcf to support IMS specific functions.
- A note will be added to TS 23.228 [2] clarify that the selection between Rx and N5 will be based on configuration in the IMS.

8.4 Conclusions Related to Key Issues #1, #2, #3 and #8

The investigations related to key issues #1, #2, #3 and #8 were not finalized and no solutions were agreed for those key issues,

Annex A: Change history

Change history							
Date	**Meeting**	**TDoc**	**CR**	**Rev**	**Cat**	**Subject/Comment**	**New version**
2018-01	SA2#125	TBD				Draft Skeleton	0.0.0
2018-02	SA2#125	S2-180509, S2-180933, S2-180939, S2-181032, S2-181033, S2-181034, S2-181035, S2-181036, S2-181037				Agreed p-CRs at SA2 #125	0.1.0
2018-03	SA2#126	S2-182360 S2-182418 S2-182419 S2-182457 S2-182980 S2-183046 S2-183047				Agreed p-CRs at SA2 #126	0.2.0
2018-05	SA2#127	S2-183165 S2-183364 S2-184457 S2-184458 S2-184459 S2-184461 S2-184463 S2-184464 S2-184465 S2-184637				Agreed p-CRs at SA2 #127 Some Rapporteur clean-up of editing artefacts most often the text of Editor's Note replaced with Edi'or's Note.	0.3.0
2018-06	SA2#127 bis	S2-185230 S2-185239 S2-185550 S2-185554 S2-185555 S2-185612 S2-185613				Agreed p-CR's at SA2#127bis	0.4.0
2019-01	SA2#130	S2-1900782 S2-1900783 S2-1900784 S2-1900793 S2-1900796 S2-1900797 S2-1900798 S2-1900833 S2-1900834 S2-1900835 S2-1900836 S2-1900837 S2-1900838 S2-1900839				Agreed pCR's at SA2#130 Formatting corrections Removal of unnecessary Editor's Notes describing clause purpose Correction of S2-1900835 change "registration" to "subscription" in clause 8.2	0.5.0
2019-03	SA2#131	S2-1902498				Agreed p-CR at SA2#131 Conclusion corrections	0.6.0
2019-03	SA2#131	SP-190191				MCC Editorial update for presentation to TSG SA#83	1.0.0
2019-11	SA2-136	S2-1911007				Agreed p-CR at SA2#136	1.1.0
2019-12	SP#86	SP-191094				MCC Editorial update for presentation to TSG SA#86 for approval	2.0.0